A Study of Toxic Emissions From A Coal-Fired Gasification Plant

DCN 95-643-004-07

Final Report, December 1995

Prepared by

Radian Corporation
8501 North Mopac Boulevard
P.O. Box 201088
Austin, Texas 78720-1088

Prepared for

U.S. Department of Energy
Pittsburgh Energy Technology Center
P.O. Box 10940
Pittsburgh, Pennsylvania 15236

Electric Power Research Institute
3412 Hillview Avenue
Palo Alto, California 94304

Louisiana Gasification Technology, Inc.
P.O. Box 150/Building 5701
Louisiana Highway One
Plaquemine, Louisiana 70765

DISCLAIMER

This report was prepared as an account of work sponsored by an agency of the United States Government. Neither the United States Government nor any agency thereof, nor any of their employees, makes any warranty, express or implied, or assumes any legal liability or responsibility for the accuracy, completeness, or usefulness of any information, apparatus, product, or process disclosed, or represents that its use would not infringe privately owned rights. Reference herein to any specific commercial product, process, or service by trade name, trademark, manufacturer, or otherwise does not necessarily constitute or imply its endorsement, recommendation, or favoring by the United States Government or any agency thereof. The views and opinions of authors expressed herein do not necessarily state or reflect those of the United States Government or any agency thereof.

MASTER

DISTRIBUTION OF THIS DOCUMENT IS UNLIMITED

EXECUTIVE SUMMARY

Under the Fine Particulate Control/Air Toxics Program, the U.S. Department of Energy (DOE) has been performing comprehensive assessments of toxic substance emissions from coal-fired electric utility units. An objective of this program is to provide information to the U.S. Environmental Protection Agency (EPA) for use in evaluating hazardous air pollutant emissions as required by the Clean Air Act Amendments (CAAA) of 1990. The Electric Power Research Institute (EPRI) has also performed comprehensive assessments of emissions from many power plants and provided the information to the EPA. The DOE program was implemented in two phases. Phase 1 involved the characterization of eight utility units, with options to sample additional units in Phase 2. Radian was one of five contractors selected to perform these toxic emission assessments.

Radian's Phase 1 test site was at Southern Company Service's Plant Yates, Unit 1, which, as part of the DOE's Clean Coal Technology Program, was demonstrating the CT-121 flue gas desulfurization technology. A commercial-scale prototype integrated gasification-combined cycle (IGCC) power plant was selected by DOE for Phase 2 testing. Funding for the Phase 2 effort was provided by DOE, with assistance from EPRI and the host site, the Louisiana Gasification Technology, Inc. (LGTI) project. This document presents the results of that effort.

The Louisiana Gasification Technology Inc. (LGTI) project was selected by the U.S. Synthetic Fuels Corporation to demonstrate the Dow Syngas process. The project commenced operation in 1987. It was partially funded by a Price Guarantee Commitment between Dow and the Synfuels Corporation. The guarantee has since been assumed by the Office of Synthetic Fuels, U.S. Treasury Department. Dow has formed a subsidiary, Destec Energy, which operates and markets their gasification technology.

Radian's assessment of emissions involved the collection and analysis of samples from the major input, process, and output streams of the IGCC plant for selected substances including those identified in Title III of the CAAA. These measurements provide information on the performance of processing systems within the plant and data on the fate of trace substances.

Site Description

The LGTI plant is located within Dow Chemical's Louisiana Division complex in Plaquemine, Louisiana. The petrochemical complex located there produces chlorine and caustic. The gasifier provides both process steam and synthesis gas, which is burned in turbines to produce electricity for the complex. Subbituminous coal from the Rochelle mine in the Powder River basin is used to produce a medium-Btu synthesis gas. At design feed rates of 2,200 tons of coal per day, 30,000 MM Btu of syngas is produced. Additional steam generated in the process produces a net output equivalent to 161 MW of electric power.

Process Description

Dow's gasifier design is proprietary but can be classified as a high-temperature, entrained-flow, slagging type. Coal is fed to the gasifier as a coal-water slurry which eliminates the need for coal lock hoppers. Oxygen and steam are added in a controlled manner to maintain the reactor within the design temperature range. Slag is removed as a water slurry, while hot synthesis gas is cooled in a heat recovery train that raises process steam. A particulate scrubber removes char from the gas, which is recycled to the gasifier. Further cooling of the syngas occurs followed by processing in a Selectamine™ unit to remove H_2S. The sweet syngas that results is blended with natural gas and fired in two gas turbines to produce electricity. The acid gas from the Selectamine™ unit is processed in a Selectox™ unit, producing elemental sulfur. Sour condensate is steam stripped, and the sour off-gas and Selectox™ tail gases are incinerated. Figure ES-1 shows a simplified block diagram of the plant. It also identifies the sampling locations used during this project.

Sampling Locations/Analytes

Due to the number and type of sampling locations as well as the groups of analytes measured, it was necessary to employ a phased approach during the test program. The majority of the plant was characterized during three consecutive test periods in November 1994. In a fourth test period, conducted in May 1995, a hot-gas probe was used to gather high-temperature/pressure samples from the raw syngas. Table ES-1 lists the sampling locations (the number refers to the location on Figure ES-1), the test period, and the types of analytes measured.

Quality Assurance and Quality Control

A rigorous QA/QC program was employed to ensure that the quality of the data produced during this effort would be well defined. Three major questions were addressed during this assessment: First, was the plant operating in a normal condition? Second, was the sampling of process streams representative, and last, were the analytical results obtained correct? Each of these concerns is discussed briefly below.

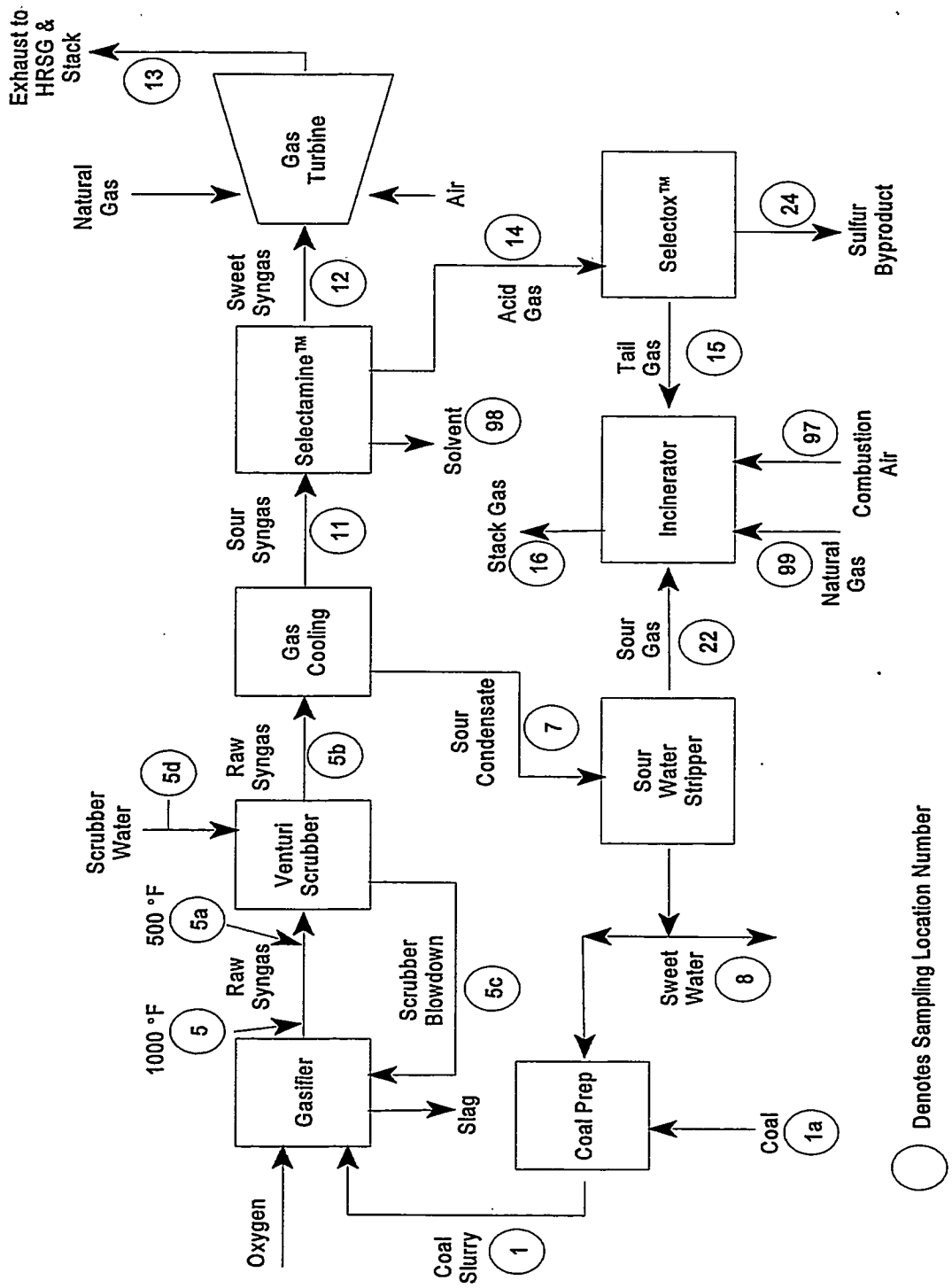

Figure ES-1
LGTI Block Flow Diagram

Table ES-1
Sampling Locations and Analytes

Location	Stream	Test Period	Analytes
1	Coal slurry	1, 2, 3	Metals, ultimate, proximate, anions
1a	Coal pile	1, 2, 3	Metals, ultimate, proximate, anions
		3	Radionuclides
4	Slag	1, 2, 3	Metals, ultimate, proximate, anions
		3	Radionuclides
5	Raw gas, 1,000°F	4	Vapor: metals, Cl, F, NH_3, HCN Particulate: metals
5a	Raw gas, 500°F	3	Metals, C_1-C_{10}, Cl, F, NH_3, HCN
5a	Raw gas, 500°F	probe shakedown test	Particulate: metals
5b	Raw gas, scrubbed	3	Metals, C_1-C_{10}, Cl, F, NH_3, HCN
5c	Scrubber blowdown (char)	3	Metals, ultimate, proximate, anions
	(filtrate)	3	Metals, ultimate, proximate, anions, ammonia, cyanide, suspended solids
5d	Scrubber water	3	Metals, ultimate, proximate, anions, ammonia, cyanide
7	Sour condensate	2	Metals, cyanide, volatile/semivolatile organics, aldehydes, anions, ammonia, phenol, sulfide, water quality
8	Sweet water	2	Metals, cyanide, volatile/semivolatile organics, aldehydes, anions, ammonia, phenol, sulfide, water quality
11	Sour syngas	1	Particulates, metals, C_1-C_{10}, volatile organics, major gases, sulfur species, semivolatile organics, aldehydes, Cl, F, NH_3, HCN
12	Sweet syngas	1	Particulates, metals, C_1-C_{10}, volatile organics, major gases, sulfur species, semivolatile organics, aldehydes, Cl, F, NH_3, HCN
13	Turbine exhaust	1	Particulates, PM-10, metals, VOST, semivolatile organics, aldehydes, Cl, F, NH_3, HCN, H_2SO_4, CEM gases
14	Acid gas	1	Metals, C_1-C_{10}, major gases, sulfur species, semivolatile organics, Cl, F, NH_3, HCN
15	Tail gas	1	Metals, C_1-C_{10}, major gases, sulfur species, semivolatile organics, NH_3, HCN
		2	C_1-C_{10}, sulfur species, semivolatile organics, NH_3, HCN, CEM gases
16	Incinerator stack	2	Particulates, PM-10, metals, VOST, sulfur species, semivolatile organics, aldehydes, Cl, F, NH_3, HCN, H_2SO_4, CEM gases

Table ES-1 (Continued)

Location	Stream	Test Period	Analytes
22	Sour gas	2	C_1-C_{10}, major gases, NH_3, HCN
24	Sulfur	1	Metals, ultimate, proximate
97	Combustion air	2	C_1-C_{10}, major gases, sulfur species, NH_3, HCN
98	Selectamine™ solvent	1	Metals, ash, volatile organics, heat stable salts
		3	Metals, ash, heat stable salts
99	Natural gas	2	Metals, C_1-C_{10}, sulfur species

Plant Operating Conditions

In general, the plant operation was very consistent, and the major monitored processes varied by less than ±10% during the test periods. On the third day of testing, November 5, the coal feed system plugged briefly, resulting in the unit going off-line for about 24 hours. Testing was resumed after another 24 hours on November 7. All other plant operational periods were normal with minimal variability.

Sample Collection

With the exceptions of the sampling locations discussed below, all other locations were sampled with minimal problems. While the collected samples are considered to be representative of normal process operation, some of the sampling methodologies used on the internal steams for trace elements are in their developmental stages and have not been validated or fully demonstrated. Therefore, the vapor phase metals results for some of the *internal* process streams are considered to be semi-quantitative.

Several of the internal gas streams contain high levels of water vapor. When the pressure and temperature is reduced during sample collection, moisture condensation occurs. Three sampling locations were heat traced to minimize condensation but another was physically impractical to heat trace. Therefore, at this one sample location, the mass of condensate collected was not equivalent to the gas volume collected, and some results for water-soluble components (i.e. ammonia) from this location have been invalidated due to their being non-representative.

One stream (the sour water stripper overhead), contained particularly high levels of NH_3 and CO_2. Upon cooling, ammonium carbonate deposits formed and plugged the sample line, preventing the collection of many of the planned samples for this stream.

In spite of the severe conditions encountered at many of the internal sampling locations, over 97% of the samples identified in the test plan were successfully obtained.

Analytical Results

At LGTI, both oxidized (containing excess oxygen) and reduced (containing hydrogen or sub-stoichiometric amounts of oxygen) streams exist in the process. Analytical QC results for the influent and effluent streams (coal, slag, sweet water, incinerator stack gas, and turbine stack gas) indicate that the analytical data are, with very few exceptions, of good quality and acceptable for use. This statement implies that the bias and precision of the results met the project data quality objectives and that minimal contamination was identified as a result of reagent, sampling, or analytical procedures. The material balances that were performed around the entire plant also support the "reasonableness" of the data obtained for the input and output streams of the plant.

A similar statement can be made for measurements of many of the internal streams. However, confidence in some of the results is not as high for the following reasons:

- No standard or validated methods are available or exist for sampling some of the substances measured.
- Some of the streams were sampled and analyzed by more than one method. When compared, the results from the different methods, in some instances, were conflicting.
- It was not possible to accurately determine particulate loading in most internal streams. This makes elemental material balances particularly difficult since trace element concentrations are typically highest in the particulate phase.
- Comparisons between different streams (e.g., by mass balance) sometimes produced illogical results.

Because of these reasons, the internal stream results, particularly for vapor-phase trace metal concentrations, should be considered only as approximations of the true concentrations.

Results

Testing at the LGTI facility has shown the following results:

- **LGTI's emissions of hazardous air pollutants were quite low.** For many substances the combined emission factors (turbine and incinerator stack) were lower than well-controlled pulverized coal steam-electric plants. QA/QC results for the emissions streams show, among other things, that ***76% of the trace element balances met the material balance objectives of 70 - 130% closure.*** Emission factors for selected HAPs are presented in Table ES-2.
- **The particulate emissions from the turbine exhaust stack were very low, measuring approximately 4 mg/Nm^3.**
- **The majority of trace and major elements present in the coal were found in the slag.**

Table ES-2
Emission Factors for Selected HAPs

	Combined Incinerator and Turbine Stack Emissions		
	Emission Rate	Emission Factor	
	lb/hr	lb/10^{12} Btu	95% CI
Particulate Loading	25	9,100	6,000
Ionic Species			
Chloride	1.7	740	180
Fluoride	0.090	38	22
Ammonia as N	1.2	440	430
Metals			
Antimony	0.011	4	4.7
Arsenic	0.0056	2.1	1.9
Barium	0.0096	3.5	1.3
Beryllium	2.5e-04	0.09	0.03
Cadmium	0.0078	2.9	3.8
Chromium	0.0073	2.7	0.63
Cobalt	0.0015	0.57	0.58
Lead	0.0077	2.9	1.5
Manganese	0.0083	3.1	6.5
Mercury	0.0046	1.7	0.43
Molybdenum	0.019	6.9	5.6
Nickel	0.011	3.9	3.6
Selenium	0.008	2.9	1.3
Aldehydes			
Acetaldehyde	0.0048	1.8	1.5
Benzaldehyde	0.0079	2.9	2.6
Formaldehyde	0.045	17	7.5
Volatile Organic Compounds			
Benzene	0.012	4.4	1.7
Carbon Disulfide	0.12	46	14
Toluene	5.3e-05	0.033	0.02
PAHs/SVOCs			
2-Methylnaphthalene	9.8e-04	0.36	0.55
Acenaphthylene	7.1e-05	0.026	0.0075
Benzo(a)anthracene	6.2e-06	0.0023	0.0002
Benzo(e)pyrene	1.5e-05	0.0056	0.0007
Benzo(g,h,i)perylene	2.6e-05	0.0096	0.0005
Naphthalene	1.1e-03	0.4	0.12
Benzoic acid	0.39	140	65

- **Some reduction in the concentration of trace substances in the syngas was measured across the Selectamine™ unit for both vapor-phase elements and organics.** Unfortunately, an operational procedure prevented an accurate assessment of the change in Selectamine™ liquid composition during the test period and trace element accumulation in the Selectamine™ solvent could not be determined.

- **The performance of the Selectox™ unit in converting H_2S to sulfur was relatively low, presumably due to the overall low sulfur level of the feed coal.** The SO_2 emissions from the gas turbine were about 0.02 lbs/MM Btu, and 0.13 lbs/MM Btu for the turbine and incinerator combined. These values were, however, well within the permitted limits for the LGTI facility.

- **Trace element mass balances around internal systems were uncertain due to the problems associated with the chemistry of sample collection and analysis of a reduced gas matrix.**

- **Although this test program was not focused on methods development, critical information was obtained regarding the characterization of trace elements in a reduced gas matrix.** The EPA Reference Method 29 (proposed), i.e., the multi-metals train, ***was ineffective in syngas (reduced gas) matrices (with the exception of mercury, discussed below)***. Although not validated, two other sampling techniques (charcoal tubes and VPAAS) for selected trace elements were implemented in parallel and these provided valuable insights into the deficiencies of EPA Method 29 for reduced gas matrices. The information obtained in this program, will provide a basis for method modifications needed for future work in characterizing IGCC systems.

- **This program resulted in a major breakthrough in the characterization of mercury in a syngas matrix.** The use of a semi-continuous mercury analyzer indicates that at least two forms of mercury are present in the synthesis gas. One of the forms is believed to be elemental mercury, the other is probably ionic. Additionally, valuable information was obtained for several absorbing/speciating solutions for the collection of mercury. The information obtained during the first three sampling periods provided the basis for modifications to the EPA Method 29 sampling train **specifically for the collection of mercury** during test Period 4. These modifications proved to be effective in the collection of mercury and will pave the way for future quantitative mercury measurements (perhaps even speciation) in syngas matrices.

- **A sampling probe was designed, fabricated, and successfully used to extract samples from a high temperature (1,000°F) and high pressure (350 psi) location.** Demonstrating the ability to collect representative samples under these conditions will allow the DOE to conduct further research in the characterization of hot gas removal systems.

Recommendations

During the four test periods at the LGTI plant and the subsequent examination and treatment of the collected data, the need for improvements, particularly in the area of syngas sampling, became apparent. These needs are expressed below as recommendations for further activities in these areas .

- **Improved and/or new methods for quantitatively collecting vapor-phase metals from syngas matrices are needed.**

  — It appears that the charcoal adsorbent used at LGTI behaved differently in the sour syngas compared to the sweet syngas. Charcoals impregnated with substances such as iodine or sulfide should be investigated for potential application in sampling syngas streams. Other adsorbents could also be investigated.

  — The existing Method 29 train was shown to be ineffective for quantitatively collecting samples of most vapor-phase metals from syngas streams (with modifications, mercury was an exception). By using other absorbing solutions, it might be possible to improve the effectiveness of this method, at least for some selected vapor-phase metals in syngas streams.

  — An on-line, vapor phase atomic absorption spectrophotometer (VPAAS) system (one of the alternate methods used for measuring trace metals in syngas) proved to be an effective method for determining the level of vapor-phase metals in the syngas streams. This method should be investigated further to add more elements to the list of analytes and to improve use of the instrumentation in the field environment. In particular, the studies for mercury speciation should be expanded to include identification of the different ionic mercury forms and potentially the development of "wet" test methods for mercury characterization in syngas matrices.

- **The hot gas probe insertion system designed and built for the LGTI testing was a complete success.** Further, the probe itself was also successfully used to collect and recover particulate samples from the hot gas stream. However, some improvements to the probe and enhancements of its capabilities should be considered.

  — The syngas stream at the LGTI plant (as well as streams at certain other syngas plants) contains a large amount of water vapor. The hot gas probe was designed for a gas stream temperature of 1,200°F. At LGTI, somewhat lower gas temperatures(< 1,000°) were encountered. As a result, during the collection of vapor-phase samples, the gas temperature dropped below the dew point and some of the water vapor in the syngas stream condensed in the probe. The probe should be modified to allow for internal heating so that condensation can be prevented.

— With minimal modifications, the probe could be used to determine particulate loadings and particle size distribution in low dust loading environments like those found at the outlet (and perhaps inlet) of a hot gas removal system.

— The probe insertion system will be effective regardless of the severity of the conditions in the gas stream being sampled. However, if the probe is to be used to sample gas streams at temperatures above 1250°F, the current materials of construction may be inappropriate. The material requirements and design changes necessary to accommodate very high temperature gas streams should be determined.

Conclusions

The data quality objectives were met and the results supported by the mass balance calculations, indicating that the characterization of the emission streams was very successful and the measured emissions from the LGTI process are very low. In comparison to the best controlled fossil steam-electric plants, the emissions are lower or equivalent for most substances. In Figure ES-2 the emission factors for those metals classified as HAPs from this project are compared to those obtained during the Phase I testing at Plant Yates (coal-fired boiler with ESP and scrubber).

[The reader should keep in mind that in spite of the information shown in Figure ES-2, the emission factors presented in this report are ***not*** *directly comparable to those of a conventional coal-fired power plant. At the LGTI facility, the syngas is co-fired with natural gas in two gas turbines, so there are two sources of Btu input, the coal and the natural gas. It is known that a fully natural gas-fired turbine can produce significant, measurable levels of HAPs. Unfortunately, at LGTI it is impossible to know how much of the emissions are attributable to the co-firing of the natural gas. As a result, the emission factors have been prepared as total mass out (turbine and incinerator) divided by total Btu content in (coal+incinerator natural gas+turbine natural gas).]*

Accurate quantification of internal process streams for vapor phase metals was hindered by the absence of suitable or fully developed sampling procedures. However, semi-quantitative measurements of vapor phase metals concentration were made, and valuable information was obtained to direct the development of new and/or modified methods for future tests.

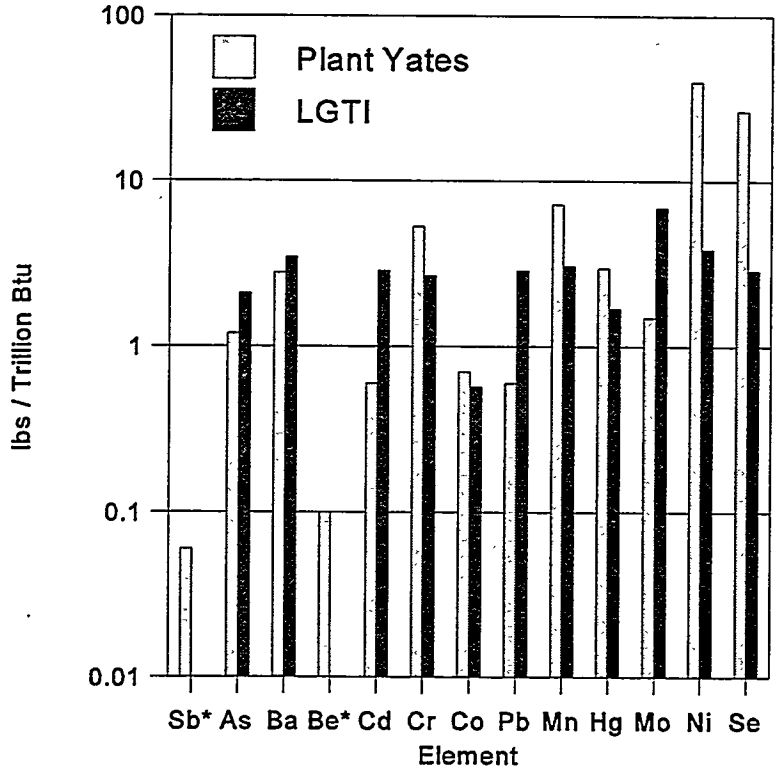

* These elements were below the detection limit at LGTI

Figure ES-2
Metals Emission Factor Comparison to Plant Yates