WNS at this time. The extent of the impact this syndrome may have on the species rangewide is uncertain but based on our current limited understanding of WNS, we expect mortality of bats at affected sites to be high (personal communication, L. Pruitt, 2008).

Environmental Baseline

The environmental baseline for the species listed above was fully described on pages 21-26 of the PBO and is hereby incorporated by reference. Since the issuance of the PBO in 2007, there has been no change in the environmental baseline.

Status of the species within the action area

Since the issuance of the PBO in 2007, there have been no new Indiana bat capture records within the vicinity of this project. Your letter and supporting materials state that suitable habitat exists within the action area, thus we are assuming presence.

Effects of the Action

Based on analysis of the information provided in your letter and supporting materials, we have determined that the effects of the proposed action are consistent with those contemplated and fully described on pages 31-35 of the PBO. Adverse effects to the Indiana bat from this project could occur due to the removal of 4.81 acres of wooded habitat, including 17 potential roost trees. As no trees exhibiting characteristics of maternity roost habitat will be removed for the project, the Service anticipates that any effects on an extant maternity colony will be insignificant. In addition, implementation of seasonal cutting restrictions will avoid direct adverse effects to individual bats. **However, photos included in the December 2009 Level One Ecological Report you submitted indicate the presence of several large dead or dying trees in the project area. These trees exhibit high-quality Indiana bat roosting habitat with potential to become suitable maternity colony roost sites in the near future. Due to the relative paucity of wooded habitat in the West Management Unit (as delineated in the PBO), the Service recommends that these trees be saved wherever possible.**

Adult male and non-reproductive female Indiana bats may be indirectly exposed to loss of roosting habitat. In general, effects on these individual bats would be less severe than the effects associated with individuals of maternity colonies. Adult male and non-reproductive female Indiana bats are not subject to the physiological demands of pregnancy and rearing young.

Males and non-reproductive females typically roost alone or occasionally in small groups. When these individuals are displaced from roosts they must utilize alternative roosts or seek out new roosts. Because these individuals are not functioning as members of maternity colonies, they do not face the challenge of reforming as a colony. Roost tree requirements for non-reproductive Indiana bats are less specific whereas maternity colonies generally require larger roost trees to accommodate multiple members of a colony. Therefore, it is anticipated that adverse indirect effects to non-reproductive bats will be less than the effects to reproductively active females. The Service anticipates that indirect effects to non-reproductive Indiana bats from the loss of roosting habitat will be insignificant.

In addition, scientific research on the Indiana bat that is funded by ODOT (mitigation measure M-6) promises to enhance our knowledge of Indiana bat maternity colony behavior relative to roosting, foraging, and rearing of offspring in the central-Ohio region. The study will also estimate the proportion of colony residents that survive, reproduce, and return to the colony among successive years. These findings will refine our understanding of maternity colony site fidelity and its associated effects on reproduction and survival, as described above.

We are not aware of any non-federal actions in the action area that are reasonably certain to occur. Thus, we do not anticipate any cumulative effects associated with this project.

Conclusion

We believe the proposed SR-794 realignment project is consistent with the PBO. After reviewing site specific information, including 1) the scope of the project, 2) the environmental baseline, 3) the status of the Indiana bat and its assumed presence within the project area, 4) the effects of the action, and 5) any cumulative effects, it is the Service's biological opinion that this project is *not likely to jeopardize* the continued existence of the Indiana bat.

Incidental Take Statement

The Service anticipates that the proposed action will result in incidental take associated with projects in the West management unit. Incidental take for this project is approximately 4.81 acres, resulting in the cumulative incidental take of 84.95 for this management unit. This project, added to the cumulative total of incidental take for the implementation of ODOT's Statewide Transportation Program, is well within the level of incidental take anticipated in the PBO through 2012 (see table below).

Management Unit	IT anticipated in PBO	IT for this project	Cumulative IT granted to date
West	1,565 acres	4.81 acres	84.95 acres
Central	2,280 acres	0 acres	27.50 acres
Northeast	4,679 acres	0 acres	141.00 acres
East	6,370 acres	0 acres	58.74 acres
South	7,224 acres	0 acres	52.09 acres
Statewide	22,118 acres	4.81 acres	364.28 acres

We determined that this level of anticipated and exempted take of Indiana bats from the proposed project, in conjunction with the other actions taken by ODOT pursuant to the PBO to date, is *not likely to result in jeopardy* to the species.

We understand that ODOT is implementing all pertinent Indiana bat conservation measures, specifically A-1 and M-6 stipulated in the Biological Assessment on pages 29-31. In addition, ODOT is monitoring the extent of incidental take that occurs on a project-by-project basis. These measures will minimize the impact of the anticipated incidental take.

This fulfills your section 7(a)(2) requirements for this action. However, should the proposed project be modified or the level of take identified above be exceeded, ODOT should promptly reinitiate consultation as outlined in 50 CFR §402.16. As provided in 50 CFR §402.16, reinitiation of formal consultation is required where discretionary Federal agency involvement or control over the action has been retained (or is authorized by law) and if: (1) the amount or extent of incidental take is exceeded; (2) new information reveals effects of the continued implementation of ODOT's Statewide Transportation Program and projects predicated upon it may affect listed species in a manner or to an extent not considered in this opinion; (3) the continued implementation of ODOT's Statewide Transportation Program and projects predicated upon it are subsequently modified in a manner that cause an effect to federally listed species not considered in this opinion; or (4) a new species is listed or critical habitat designated that may be affected by the action. In instances where the amount or extent of incidental take is exceeded, any operations causing such take must cease, pending reinitiation. Requests for reinitiation, or questions regarding reinitiation, should be directed to the U.S. Fish Wildlife Service's Columbus, Ohio Field Office.

We appreciate your continued efforts to ensure that this project is consistent with all provisions outlined in the Biological Assessment and PBO. If you have any questions regarding our response or if you need additional information, please contact Karen Hallberg at extension 23.

Sincerely,

for Mary Knapp, Ph.D.
Field Supervisor

cc: ODNR, DOW, SCEA Unit, Columbus, OH
Ohio Regulatory Transportation Office, Columbus, OH (*email only*)
OEPA, Columbus, OH (*email only*)

Appendix D

Design Plans

APPENDIX D

DESIGN PLANS

CLARK COUNTY, OHIO

CLA-794-0.60

WEST BLEE ROAD

GREEN TOWNSHIP

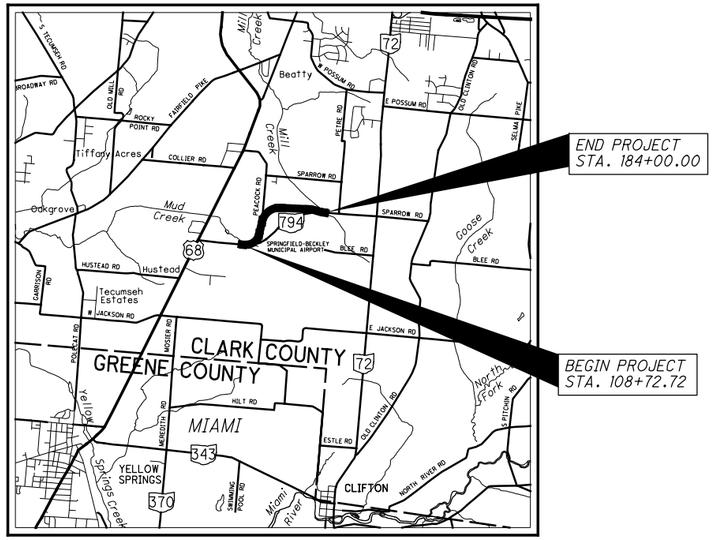

LOCATION MAP

LATITUDE: N39°58'32" LONGITUDE: W83°50'33"

SCALE IN MILES

0 1 2 3 4

N

PORTION TO BE IMPROVED
INTERSTATE HIGHWAY
STATE & FEDERAL ROUTES
COUNTY & TOWNSHIP ROADS
OTHER ROADS

DESIGN DESIGNATION

	S.R. 794	PEACOCK RD
CURRENT ADT (2011)	2,380	430
DESIGN YEAR ADT (2031)	2,380	430
DESIGN HOURLY VOLUME (2031)	290	60
DIRECTIONAL DISTRIBUTION	51%	51%
TRUCKS (24 HOUR B&C)	5%	<4%
DESIGN SPEED	55 MPH	55 MPH
LEGAL SPEED	55 MPH	55 MPH
DESIGN FUNCTIONAL CLASSIFICATION:	RURAL MAJOR COLLECTOR	RURAL LOCAL
NHS PROJECT	NO	NO

DESIGN EXCEPTIONS

DESIGN FEATURES	APPROVAL DATES	SHEET NUMBERS
PEACOCK RD		74
HORIZONTAL ALIGNMENT	2/8/10	74
SUPERELEVATION	2/8/10	

INDEX OF SHEETS:

TITLE SHEET	1
SCHEMATIC PLAN	2-3
TYPICAL SECTIONS	4-7
GENERAL NOTES	8-10
MAINTENANCE OF TRAFFIC	11-13
MAINTENANCE OF TRAFFIC DETOUR PLAN	14
GENERAL SUMMARY	15-16
SUBSUMMARY	17-22
PROJECT SITE PLAN	23
PLAN AND PROFILE S.R. 794	24-30
CROSS SECTIONS S.R. 794	31-85
PLAN AND PROFILE PEACOCK RD	86
CROSS SECTIONS PEACOCK RD	87-93
PLAN AND PROFILES AIRPORT DRIVE AND AIRPORT DROP LANE	94
CROSS SECTIONS AIRPORT DRIVE	95-98
CROSS SECTIONS AIRPORT DROP LANE	99-101
SUPERELEVATION TABLE	102-108
INTERSECTION DETAILS	109-111
DRIVEWAY PROFILES	112-114
STORM SEWER PROFILES	115-116
CULVERT DETAILS	117-126
DITCH TRANSITION DETAIL	127
TRAFFIC CONTROL PLAN	128-131

PROJECT DESCRIPTION

THE PROJECT WILL CONSTRUCT 1.42 MILES OF A NEW ROAD, STATE ROUTE 794, OUTSIDE THE SPRINGFIELD-BECKLEY MUNICIPAL AIRPORT. THE PROJECT INCLUDES NEW FULL DEPTH PAVEMENT ALONG A NEW ALIGNMENT, AND CULVERTS

PROJECT EARTH DISTURBED AREA:	24.34 ACRES
ESTIMATED CONTRACTOR EARTH DISTURBED AREA:	0.125 ACRES
NOTICE OF INTENT EARTH DISTURBED AREA:	24.47 ACRES

2010 SPECIFICATIONS

THE STANDARD SPECIFICATIONS OF THE STATE OF OHIO, DEPARTMENT OF TRANSPORTATION, INCLUDING CHANGES AND SUPPLEMENTAL SPECIFICATIONS LISTED IN THE PROPOSAL SHALL GOVERN THIS IMPROVEMENT.

CURRENT SUBMITTAL
JULY 21, 2011

UNDERGROUND UTILITIES

CONTACT BOTH SERVICES
CALL TWO WORKING DAYS
BEFORE YOU DIG

CALL
1-800-362-2764
(TOLL FREE)
OHIO UTILITIES PROTECTION SERVICE
NON-MEMBERS
MUST BE CALLED DIRECTLY

OIL & GAS PRODUCERS PROTECTIVE SERVICE CALL: **1-800-925-0988**

STANDARD CONSTRUCTION DRAWINGS

BP-3.1	10/19/07	CB-1.1	07/15/05	TC-41.20	01/19/01			800	1/21/11
BP-4.1	07/16/04	CB-1.2	07/15/05	TC-41.30	01/19/07			802	1/21/11
				TC-41.40	07/16/04			832	5/5/09
F-1.1	04/16/10	HW-2.1	07/30/07	TC-42.20	01/21/11			836	4/15/05
		HW-2.2	07/30/07	TC-52.10	01/19/07				
GR-1.1	07/16/04			TC-52.20	01/19/07				
GR-2.1	01/16/04								
GR-4.2	01/19/07	DM-1.1	01/21/11	MT-97.10	10/15/10				
GR-5.3	04/16/10	DM-1.4	04/21/06	MT-97.11	10/15/10				
		DM-4.3	04/17/09	MT-101.60	04/17/09				
RM-1.1	01/21/11	DM-4.4	04/17/09	MT-101.90	01/16/09				
		DM-5.1	07/19/02	MT-110.10	01/16/09				
LA-1.1	10/15/10								
LA-1.2	01/16/09								

SUPPLEMENTAL SPECIFICATIONS

SPECIAL PROVISIONS

ENGINEERS SEAL:

SIGNED:
DATE:

APPROVED
DATE CLARK COUNTY ENGINEER

APPROVED
DATE CLARK COUNTY COMMISSIONER

APPROVED
DATE CLARK COUNTY COMMISSIONER

APPROVED
DATE CLARK COUNTY COMMISSIONER

PLAN PREPARED BY:

AMERICAN STRUCTUREPOINT INC.
2550 CORPORATE EXCHANGE DR. STE 300
COLUMBUS, OH 43231
TEL 614.901.2235 FAX 614.901.2236
www.structurepoint.com

MRyabinky
7/22/2011 2:43:42 PM
O:\CO2008\0156\C_Design\CLA\78677\roadway\sheets\78677GT001.dgn

FEDERAL PROJECT NO. EO50139

PID NO. 78677

STATE JOB NO. 479349

RAILROAD INVOLVEMENT NONE

CLA-794-0.60

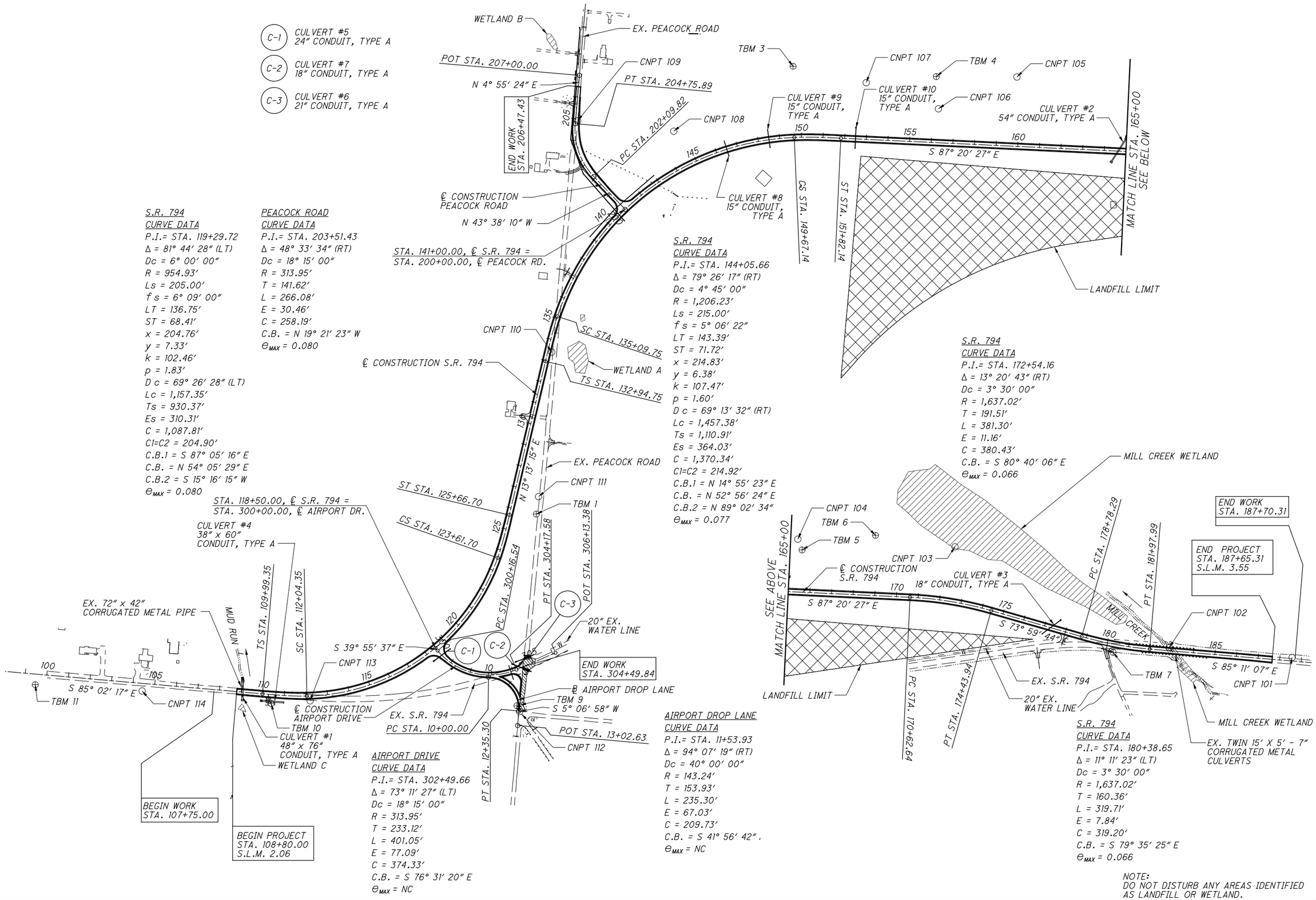

S.R. 794
CURVE DATA
P.I.= STA. 119+29.72
Δ = 81° 44' 28" (LT)
Dc = 6° 00' 00"
R = 954.93'
Ls = 205.00'
f s = 6° 09' 00"
LT = 136.75'
ST = 68.41'
x = 204.76'
y = 7.33'
k = 102.46'
p = 1.83'
D c = 69° 26' 28" (LT)
Lc = 1,157.35'
Ts = 930.37'
Es = 310.31'
C = 1,087.81'
C1=C2 = 204.90'
C.B.1 = S 87° 05' 16" E
C.B. = N 54° 05' 29" E
C.B.2 = S 15° 16' 15" W
e_{MAX} = 0.080

PEACOCK ROAD
CURVE DATA
P.I.= STA. 203+51.43
Δ = 48° 33' 34" (RT)
Dc = 18° 15' 00"
R = 313.95'
T = 141.62'
L = 266.08'
E = 30.46'
C = 258.19'
C.B. = N 19° 21' 23" W
e_{MAX} = 0.080

S.R. 794
CURVE DATA
P.I.= STA. 144+05.66
Δ = 79° 26' 17" (RT)
Dc = 4° 45' 00"
R = 1,206.23'
Ls = 215.00'
f s = 5° 06' 22"
LT = 143.39'
ST = 71.72'
x = 214.83'
y = 6.38'
k = 107.47'
p = 1.60'
D c = 69° 13' 32" (RT)
Lc = 1,457.38'
Ts = 1,110.91'
Es = 364.03'
C = 1,370.34'
C1=C2 = 214.92'
C.B.1 = N 14° 55' 23" E
C.B. = N 52° 56' 24" E
C.B.2 = N 89° 02' 34"
e_{MAX} = 0.077

S.R. 794
CURVE DATA
P.I.= STA. 172+54.16
Δ = 13° 20' 43" (RT)
Dc = 3° 30' 00"
R = 1,637.02'
T = 191.51'
L = 381.30'
E = 11.16'
C = 380.43'
C.B. = S 80° 40' 06" E
e_{MAX} = 0.066

AIRPORT DRIVE
CURVE DATA
P.I.= STA. 302+49.66
Δ = 73° 11' 27" (LT)
Dc = 18° 15' 00"
R = 313.95'
T = 233.12'
L = 401.05'
E = 77.09'
C = 374.33'
C.B. = S 76° 31' 20" E
e_{MAX} = NC

AIRPORT DROP LANE
CURVE DATA
P.I.= STA. 11+53.93
Δ = 94° 07' 19" (RT)
Dc = 40° 00' 00"
R = 143.24'
T = 153.93'
L = 235.30'
E = 67.03'
C = 209.73'
C.B. = S 41° 56' 42"
e_{MAX} = NC

S.R. 794
CURVE DATA
P.I.= STA. 180+38.65
Δ = 11° 11' 23" (LT)
Dc = 3° 30' 00"
R = 1,637.02'
T = 160.36'
L = 319.71'
E = 7.84'
C = 319.20'
C.B. = S 79° 35' 25" E
e_{MAX} = 0.066

NOTE:
DO NOT DISTURB ANY AREAS IDENTIFIED AS LANDFILL OR WETLAND.

CALCULATED AVP
CHECKED CSR

SCHEMATIC PLAN

CLA-794-0.60

MRyabinky
7/22/2011 2:43:53 PM
O:\CO2008\0156\C Design\CLA\78677\roadway\sheets\78677GB001.dgn

LEGEND

1. ITEM 448 - 1 1/4" ASPHALT CONCRETE SURFACE COURSE, TYPE 1, PG 64-22
2. ITEM 448 - 1 3/4" ASPHALT CONCRETE INTERMEDIATE COURSE, TYPE 2, PG 64-22
3. ITEM 301 - 5" ASPHALT CONCRETE BASE, PG 64-22
4. ITEM 304 - 7" AGGREGATE BASE
5. ITEM 304 - 8" AGGREGATE BASE
6. ITEM 605 - AGGREGATE DRAIN
7. ITEM 204 - PROOF ROLLING
8. ITEM 204 - SUBGRADE COMPACTION
9. ITEM 659 - SEEDING AND MULCHING
10. ITEM 606 - GUARDRAIL, TYPE 5 (WHERE SHOWN ON PLANS)
11. ITEM 407 - TACK COAT, 0.075 GAL / SQ YD
12. ITEM 407 - TACK COAT FOR INTERMEDIATE COURSE, 0.04 GAL / SQ YD
13. ITEM 408 - PRIME COAT, 0.4 GAL / SQ YD
14. ITEM 422 - SINGLE CHIP SEAL WITH POLYMER BINDER
15. ITEM 204 - 24" GRANULAR EMBANKMENT Δ
16. ITEM 448@ - 3 3/4" ASPHALT CONCRETE INTERMEDIATE COURSE, TYPE 2, PG 64-22
17. ITEM 304 - 6" AGGREGATE BASE
18. ITEM 606 - GUARDRAIL, TYPE 5
19. ITEM 204 - GEOTEXTILE FABRIC Δ

EXISTING LEGEND

- (A) ASPHALT PAVEMENT- 5" TO 6"
- (B) AGGREGATE BASE - 7" TO 8"
- (C) ASPHALT PAVEMENT - 5"
- (D) AGGREGATE BASE - 6"

@ PLACE IN TWO LIFTS, ONE LIFT WILL BE 2" AND THE OTHER LIFT WILL BE 1 3/4"

Δ - ONLY USE FROM STA. 109+00 TO STA. 115+00 AND FROM STA. 137+00 TO STA. 140+00

[1] - ±12.90' AT STA. 108+80.00, ±11.55' AT STA. 187+65.31

[2] - ±8.76' AT STA. 108+80.00, ±13.86' AT STA. 187+65.31

[3] - VARIES FROM 12.90' AT STA. 108+80.00 TO 12.00' AT STA. 109+30.00 VARIES FROM 12.00' AT STA. 186+62.31 TO 11.55' AT STA. 187+65.31

[4] - VARIES FROM 8.76' AT STA. 108+80.00 TO 12.00' AT STA. 109+30.00 VARIES FROM 12.00' AT STA. 186+62.31 TO 13.86' AT STA. 187+65.31

[5] - VARIES FROM 12.00' AT STA. 109+99.35 TO 14.50' AT STA. 112+04.35 14.50' FROM STA. 112+04.35 TO STA. 123+61.70 VARIES FROM 14.50' AT STA. 123+61.70 TO 12.00' AT STA. 125+66.70

[6] - MAX SUPER RATE FOR CURVE FROM STA. 112+04.35 TO STA. 123+61.70 IS 8.00% MAX SUPER RATE FOR CURVE FROM STA. 179+34.62 TO STA. 181+41.66 IS 6.60%

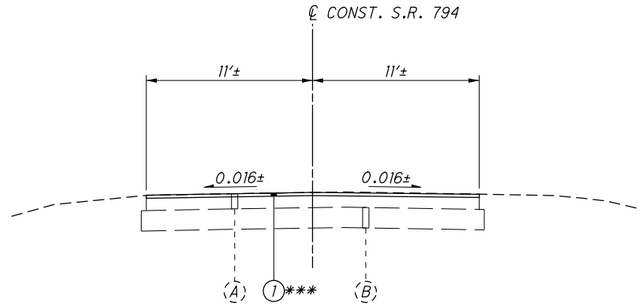

ADJOINING SECTION - S.R. 794

STA. 108+80.00

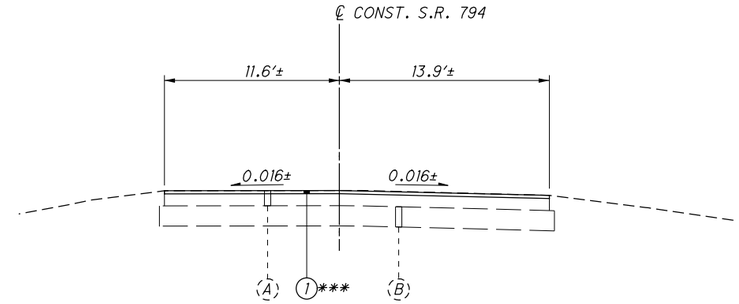

ADJOINING SECTION - S.R. 794

STA. 187+65.31

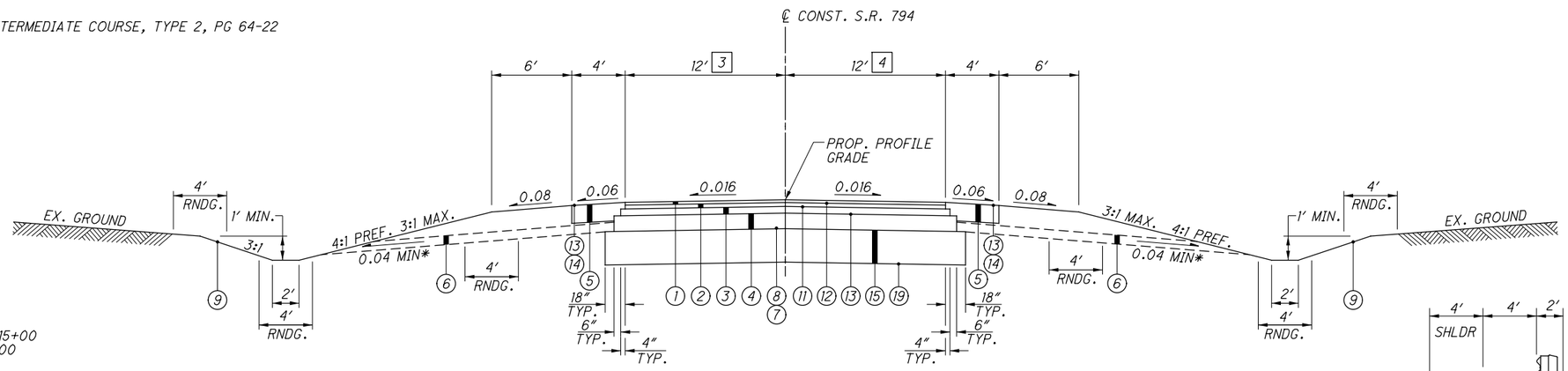

NORMAL SECTION - S.R. 794

SECTION APPLIES:
STA. 108+80.00 TO STA. 109+58.35 = 78.35 FT.
STA. 126+07.70 TO STA. 132+50.80 = 643.10 FT.
STA. 152+26.81 TO STA. 169+09.00 = 1682.19 FT.
STA. 175+97.58 TO STA. 177+24.65 = 127.07 FT.
STA. 183+51.63 TO STA. 187+65.31 = 413.68 FT.
TOTAL LENGTH = 2945.02 FT.

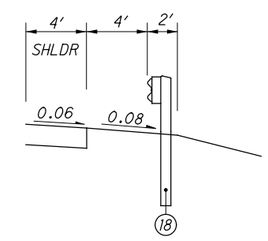

GUARDRAIL LOCATION

STA. 105+80 TO STA. 112+50 RT
STA. 181+25 TO STA. 182+50 LT
STA. 181+75 TO STA. 182+75 RT

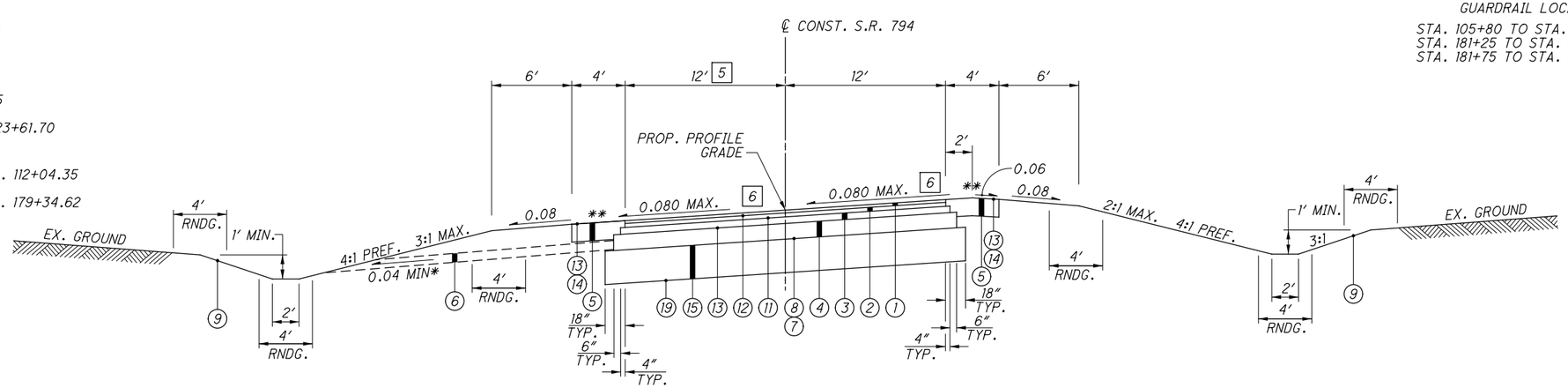

SUPERELEVATION SECTION - S.R. 794

SECTION APPLIES:
STA. 109+58.35 TO STA. 126+07.70 = 1649.35 FT.
STA. 177+24.65 TO STA. 183+51.63 = 626.98 FT.
TOTAL LENGTH = 2276.33 FT.

* - 0.08 DESIRABLE

** - SEE SUPERELEVATION TABLES FOR SHOULDER SLOPE

*** - REMOVE UNDER ITEM 202 1 1/4" OF EXISTING ASPHALT AND REPLACE WITH NEW SURFACE COURSE FOR THE LENGTH OF THE BUTT JOINT

TYPICAL SECTIONS - S.R. 794

CLA-794-0.60

MRyabinky
7/22/2011 2:44:05 PM
O:\CO2008.0156\C.Design\CLA\78677\roadway\sheets\78677GY001.dgn

LEGEND

1. ITEM 448 - 1 1/4" ASPHALT CONCRETE SURFACE COURSE, TYPE 1, PG 64-22
2. ITEM 448 - 1 3/4" ASPHALT CONCRETE INTERMEDIATE COURSE, TYPE 2, PG 64-22
3. ITEM 301 - 5" ASPHALT CONCRETE BASE, PG 64-22
4. ITEM 304 - 7" AGGREGATE BASE
5. ITEM 304 - 8" AGGREGATE BASE
6. ITEM 605 - AGGREGATE DRAIN
7. ITEM 204 - PROOF ROLLING
8. ITEM 204 - SUBGRADE COMPACTION
9. ITEM 659 - SEEDING AND MULCHING
10. ITEM 606 - GUARDRAIL, TYPE 5 (WHERE SHOWN ON PLANS)
11. ITEM 407 - TACK COAT, 0.075 GAL / SQ YD
12. ITEM 407 - TACK COAT FOR INTERMEDIATE COURSE, 0.04 GAL / SQ YD
13. ITEM 408 - PRIME COAT, 0.4 GAL / SQ YD
14. ITEM 422 - SINGLE CHIP SEAL WITH POLYMER BINDER
15. ITEM 204 - 24" GRANULAR EMBANKMENT Δ
16. ITEM 448@ - 3 3/4" ASPHALT CONCRETE INTERMEDIATE COURSE, TYPE 2, PG 64-22
17. ITEM 304 - 6" AGGREGATE BASE
18. NOT USED
19. ITEM 204 - GEOTEXTILE FABRIC Δ

EXISTING LEGEND

- (A) ASPHALT PAVEMENT - 5" TO 6"
- (B) AGGREGATE BASE - 7" TO 8"
- (C) ASPHALT PAVEMENT - 5"
- (D) AGGREGATE BASE - 6"

@ PLACE IN TWO LIFTS, ONE LIFT WILL BE 2" AND THE OTHER LIFT WILL BE 1 3/4"

Δ - ONLY USE FROM STA. 109+00 TO STA. 115+00 AND FROM STA. 137+00 TO STA. 140+00

[1] - MAX SUPER RATE FOR CURVE FROM STA. 135+09.75 TO STA. 149+67.14 IS 7.70%
MAX SUPER RATE FOR CURVE FROM STA. 171+18.97 TO STA. 173+87.61 IS 6.60%

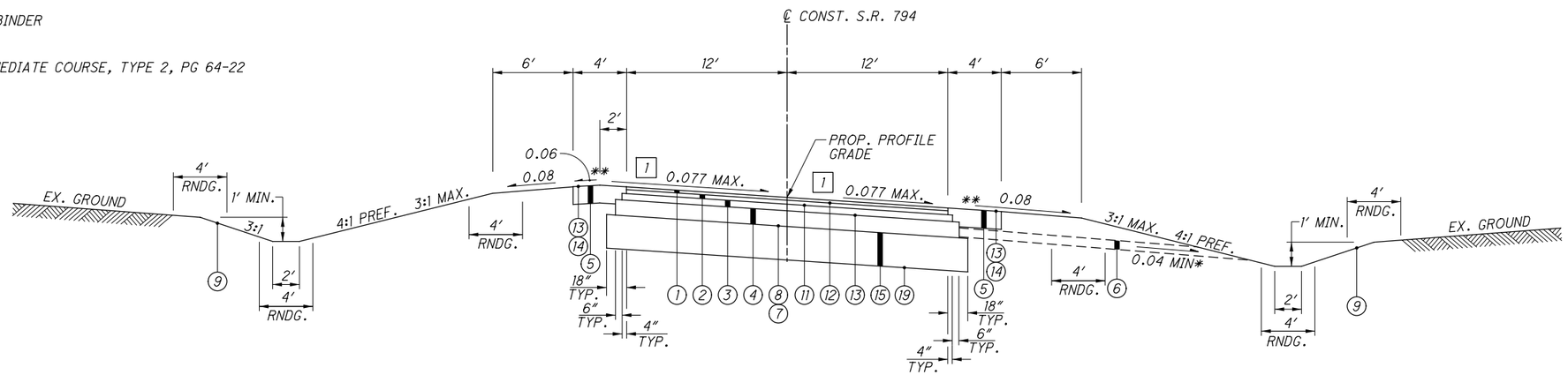

SUPERELEVATION SECTION - S.R. 794

SECTION APPLIES:
STA. 132+50.08 TO STA. 152+26.81 = 1976.73 FT.
STA. 169+09.00 TO STA. 175+97.58 = 688.58 FT.
TOTAL LENGTH = 2665.31 FT.

* - 0.08 DESIRABLE

** - SEE SUPERELEVATION TABLES FOR SHOULDER SLOPE

*** - UNDER ITEM 202 REMOVE 1 1/4" OF EXISTING ASPHALT AND REPLACE WITH NEW SURFACE COURSE FOR THE LENGTH OF THE BUTT JOINT

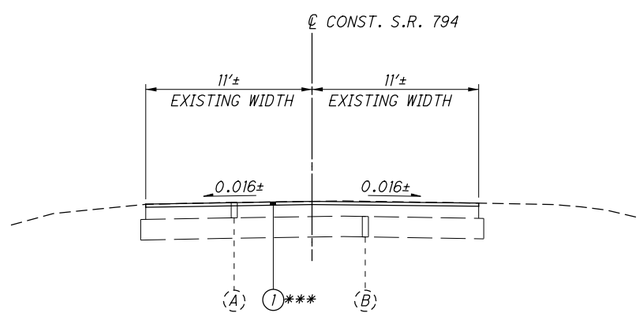

OVERLAY SECTION - S.R. 794

STA. 80+25.00 TO 108+80.00 = 2855 FT
STA. 187+65.31 TO 217+70.00 = 3004.69 FT

BUTT JOINT PER BP-3.1
STA. 180+25.00 TO STA. 181+30.00 = 105'
STA. 217+70.00 TO STA. 218+75.00= 105'

MRyabinky 7/22/2011 2:44:08 PM
O:\CO2008\0156\C_Design\CLA\78677\roadway\sheets\78677GY002.dgn

TYPICAL SECTIONS - S.R. 794

CLA-794-0.60

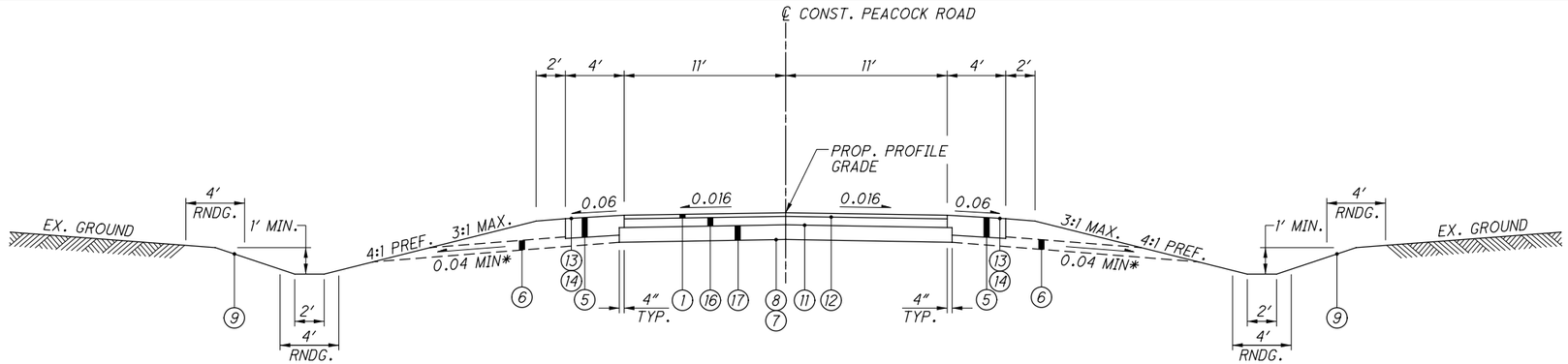

NORMAL SECTION - PEACOCK ROAD

SECTION APPLIES:
STA. 200+12.00 TO STA. 200+87.03 = 75.03 FT.

* - 0.08 DESIRABLE

** - SEE SUPERELEVATION TABLES FOR SHOULDER SLOPE

*** - REMOVE UNDER ITEM 202 1¼″ OF EXISTING ASPHALT AND REPLACE WITH NEW SURFACE COURSE FOR THE LENGTH OF THE BUTT JOINT

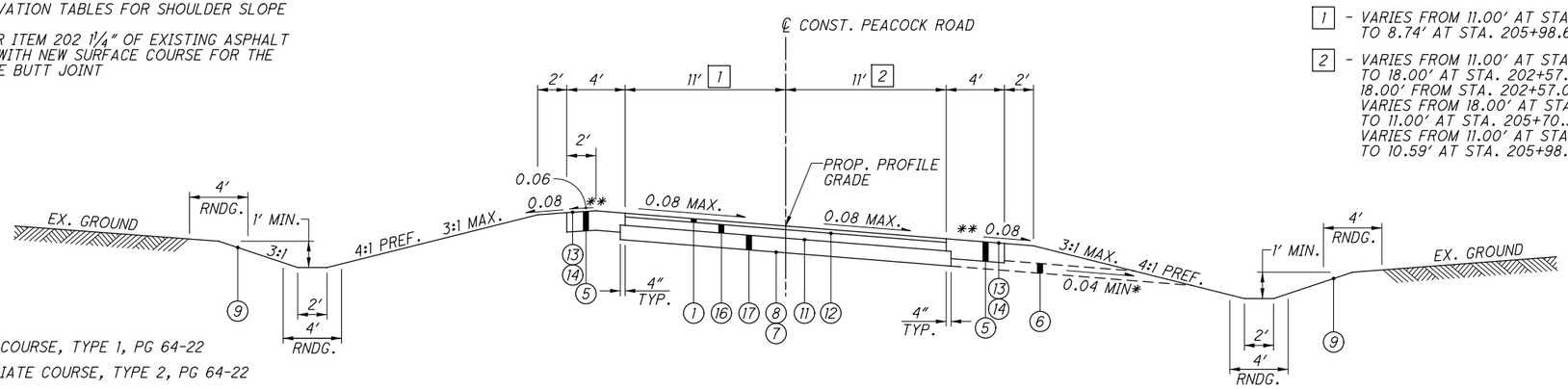

1 - VARIES FROM 11.00′ AT STA. 205+18.68 TO 8.74′ AT STA. 205+98.68

2 - VARIES FROM 11.00′ AT STA. 201+15.37 TO 18.00′ AT STA. 202+57.05
18.00′ FROM STA. 202+57.05 TO STA. 204+28.66
VARIES FROM 18.00′ AT STA. 204+28.66 TO 11.00′ AT STA. 205+70.34
VARIES FROM 11.00′ AT STA. 205+18.68 TO 10.59′ AT STA. 205+98.68

SUPERELEVATION SECTION - PEACOCK ROAD

SECTION APPLIES:
STA. 200+87.03 TO STA. 205+98.68 = 511.65 FT.
TOTAL LENGTH = 511.65 FT.

LEGEND

1. ITEM 448 - 1 ¼″ ASPHALT CONCRETE SURFACE COURSE, TYPE 1, PG 64-22
2. ITEM 448 - 1 ¾″ ASPHALT CONCRETE INTERMEDIATE COURSE, TYPE 2, PG 64-22
3. ITEM 301 - 3″ ASPHALT CONCRETE BASE, PG 64-22
4. ITEM 304 - 7″ AGGREGATE BASE
5. ITEM 304 - 8″ AGGREGATE BASE
6. ITEM 605 - AGGREGATE DRAIN
7. ITEM 204 - PROOF ROLLING
8. ITEM 204 - SUBGRADE COMPACTION
9. ITEM 659 - SEEDING AND MULCHING
10. ITEM 606 - GUARDRAIL, TYPE 5 (WHERE SHOWN ON PLANS)
11. ITEM 407 - TACK COAT, 0.075 GAL / SQ YD
12. ITEM 407 - TACK COAT FOR INTERMEDIATE COURSE, 0.04 GAL / SQ YD
13. ITEM 408 - PRIME COAT, 0.4 GAL / SQ YD
14. ITEM 422 - SINGLE CHIP SEAL WITH POLYMER BINDER
15. NOT USED
16. ITEM 448@ - 3 ¾″ ASPHALT CONCRETE INTERMEDIATE COURSE, TYPE 2, PG 64-22
17. ITEM 304 - 6″ AGGREGATE BASE

EXISTING LEGEND

- (A) ASPHALT PAVEMENT - 5″ TO 6″
- (B) AGGREGATE BASE - 7″ TO 8″
- (C) ASPHALT PAVEMENT - 5″
- (D) AGGREGATE BASE - 6″

@ PLACE IN TWO LIFTS, ONE LIFT WILL BE 2″ AND THE OTHER LIFT WILL BE 1 ¾″

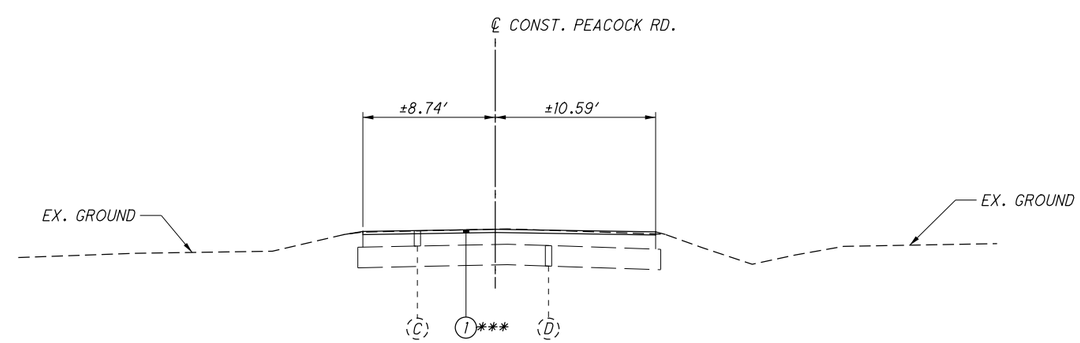

ADJOINING SECTION - PEACOCK ROAD

STA. 205+98.68

BUTT JOINT PER BP-3.1
STA. 205+98.68 TO STA. 206+47.43 = 48.75′

TYPICAL SECTIONS - PEACOCK RD

CLA-794-0.60

MRyabinky
7/22/2011 2:44:11 PM
O:\CO2008\0156\C Design\CLA\78677\roadway\sheets\78677GY003.dgn

LEGEND

1. ITEM 448 - 1 1/4" ASPHALT CONCRETE SURFACE COURSE, TYPE 1, PG 64-22
2. ITEM 448 - 1 3/4" ASPHALT CONCRETE INTERMEDIATE COURSE, TYPE 2, PG 64-22
3. ITEM 301 - 3" ASPHALT CONCRETE BASE, PG 64-22
4. ITEM 304 - 7" AGGREGATE BASE
5. ITEM 304 - 8" AGGREGATE BASE
6. ITEM 605 - AGGREGATE DRAIN
7. ITEM 204 - PROOF ROLLING
8. ITEM 204 - SUBGRADE COMPACTION
9. ITEM 659 - SEEDING AND MULCHING
10. ITEM 606 - GUARDRAIL, TYPE 5 (WHERE SHOWN ON PLANS)
11. ITEM 407 - TACK COAT, 0.075 GAL / SQ YD
12. ITEM 407 - TACK COAT FOR INTERMEDIATE COURSE, 0.04 GAL / SQ YD
13. ITEM 408 - PRIME COAT, 0.4 GAL / SQ YD
14. ITEM 422 - SINGLE CHIP SEAL WITH POLYMER BINDER
15. NOT USED
16. ITEM 448@ - 3 3/4" ASPHALT CONCRETE INTERMEDIATE COURSE, TYPE 2, PG 64-22
17. ITEM 304 - 6" AGGREGATE BASE

EXISTING LEGEND

- (A) ASPHALT PAVEMENT - 5" TO 6"
- (B) AGGREGATE BASE - 7" TO 8"
- (C) ASPHALT PAVEMENT - 5"
- (D) AGGREGATE BASE - 6"

* PLACE IN TWO LIFTS, ONE LIFT WILL BE 2" AND THE OTHER LIFT WILL BE 1 3/4"

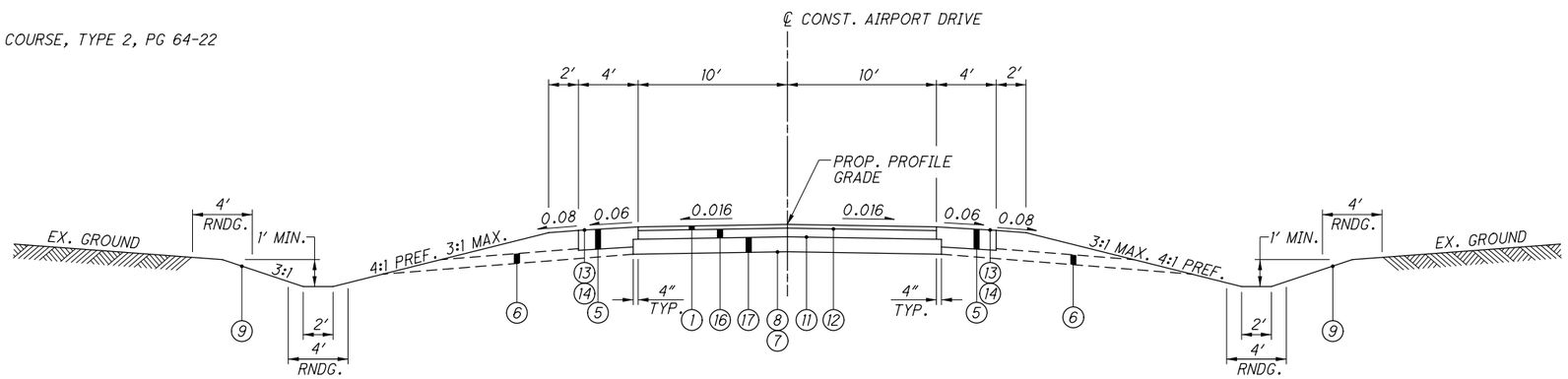

NORMAL SECTION - AIRPORT DRIVE

SECTION APPLIES:
STA. 300+12.00 TO STA. 304+49.84 = 437.84 FT.

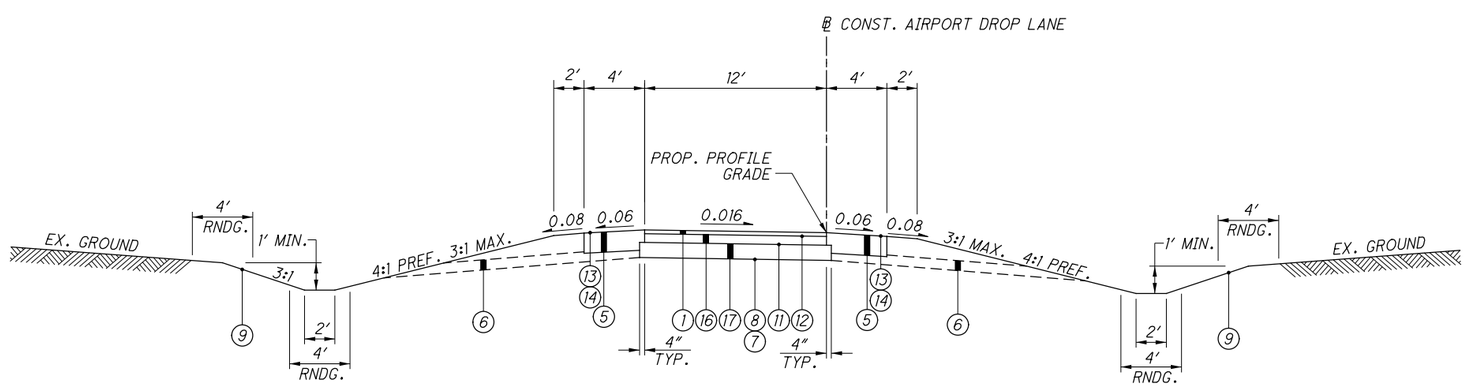

NORMAL SECTION - AIRPORT DROP LANE

SECTION APPLIES:
STA. 10+00.00 TO STA. 12+35.30 = 235.30 FT.

TYPICAL SECTIONS - AIRPORT DRIVE AND DROP LANE

CLA-794-0.60

MRyabinky
7/22/2011 2:44:14 PM
O:\CO2008\0156\C Design\CLA\78677\roadway\sheets\78677GY004.dgn

PROJECT DATA	
TOTAL AREA (RIGHT-OF-WAY)	X.XX AC.
PROJECT EARTH DISTURBED AREA	X.XX AC.
ESTIMATED CONTRACTOR EARTH DISTURBED AREA	0.125 AC.
NOTICE OF INTENT EARTH DISTURBED AREA	X.XX AC.
RUNOFF COEFFICIENT FOR PRE-CONSTRUCTION SITE	0.30
RUNOFF COEFFICIENT FOR POST-CONSTRUCTION SITE	0.60
SOIL DATA	SOIL AND WATER CONSERVATION MAPS: CLARK COUNTY WEB SOIL SURVEY OF OHIO COORDINATE SYSTEM: UTM ZONE 17N NAD 83 SURVEY AREA DATA: VERSION 10, DEC 23, 2008 CEA - CELINA SILT LOAM KO - KOKOMO SILTY CLAY LOAM MkB2 - MIAMIAN SILT LOAM
IMMEDIATE RECEIVING WATERS	MUD RUN/MILL CREEK
SUBSEQUENT RECEIVING WATER	MAD RIVER
IMPERVIOUS PAVED AREA PRE-CONSTRUCTION	X.XX AC.
IMPERVIOUS PAVED AREA POST-CONSTRUCTION	X.XX AC.
POST CONSTRUCTION BMP	VEGETATED BIOFILTERS WERE PROVIDED TO MEET NPDES POST-CONSTRUCTION REQUIREMENTS. SEE CROSS SECTIONS SHEETS FOR LOCATIONS.

PROJECT DESCRIPTION

THE PROJECT WILL CONSTRUCT 1.42 MILES OF A NEW ROAD, STATE ROUTE 794, OUTSIDE THE SPRINGFIELD-BECKLEY MUNICIPAL AIRPORT. THE PROJECT INCLUDES NEW FULL DEPTH PAVEMENT ALONG A NEW ALIGNMENT, AND CULVERTS

CLIFTON, OHIO
USGS QUADRANGLE MAP
LATITUDE: N 39° 54′ 53″
LONGITUDE: W 82° 51′ 24″

LEGEND

DRAINAGE AREA LIMIT

OVERLAND DRAINAGE PATTERN

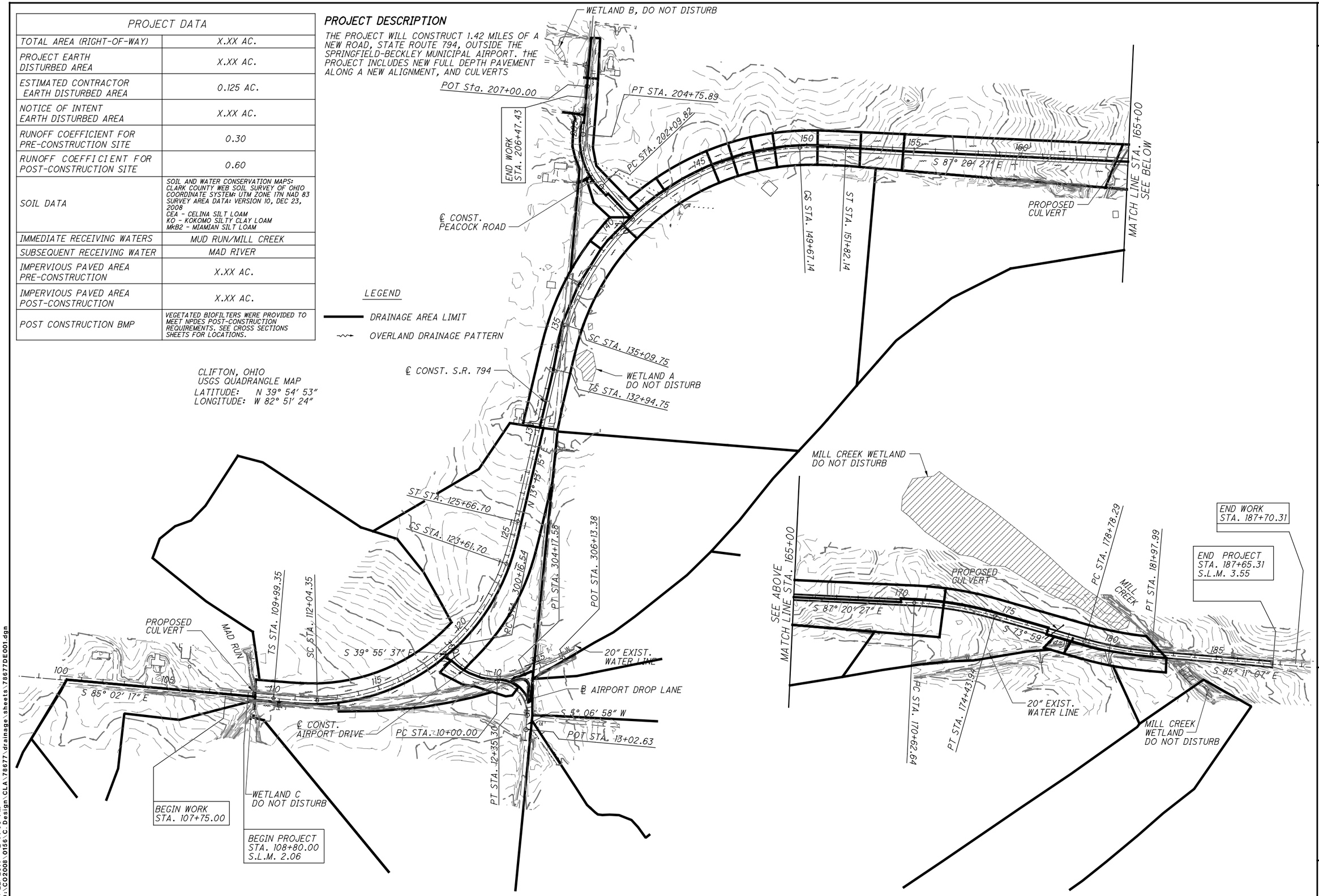

HORIZONTAL SCALE IN FEET 0 100 200 400

CALCULATED AVP
CHECKED CSR

PROJECT SITE PLAN

CLA-794-0.60

MRyabinky
7/22/2011 2:44:50 PM
O:\CO2008_0156\C_Design\CLA\78677\drainage\sheets\78677DE001.dgn

① - BEGIN ANCHOR ASSEMBLY, TYPE T
STA. 109+93.62, 18' RT

② - BEGIN ANCHOR ASSEMBLY, TYPE T
STA. 110+53.53, 18' RT

③ - BEGIN ANCHOR ASSEMBLY, TYPE E,
STA. 112+03.53, 18.75' RT

④ - END ANCHOR ASSEMBLY, TYPE E,
STA. 112+53.53, 18.75' RT

⑤ - WATER VALVE ADJUSTED TO GRADE

S.R. 794 CURVE DATA

P.I.= STA. 119+29.72
Δ = 81° 44' 28" (LT)
Dc = 6° 00' 00"
R = 954.93'
Ls = 205.00'
θ s = 6° 09' 00"
LT = 136.75'
ST = 68.41'
x = 204.76'
y = 7.33'
k = 102.46'
p = 1.83'
D c = 69° 26' 28" (LT)
Lc = 1,157.35'
Ts = 930.37'
Es = 310.31'
C = 1,087.81'
C1=C2 = 204.90'
C.B.1 = S 87° 05' 16" E
C.B. = N 54° 05' 29" E
C.B.2 = S 15° 16' 15" W
e_{MAX} = 0.080

LEGEND

- ITEM 202, PAVEMENT REMOVED, 36233x1/9 = 4026 SQ. YD.
  ITEM 203, EMBANKMENT, 36233x0.5*1/27 = 671 CU. YD.
- WETLAND
- ITEM 670 - DITCH EROSION PROTECTION MAT, TYPE A

NOTES:

SEE SHEETS 117, 120 AND 121 FOR CULVERT DETAILS
SEE SHEET 112 FOR DRIVEWAY PROFILES

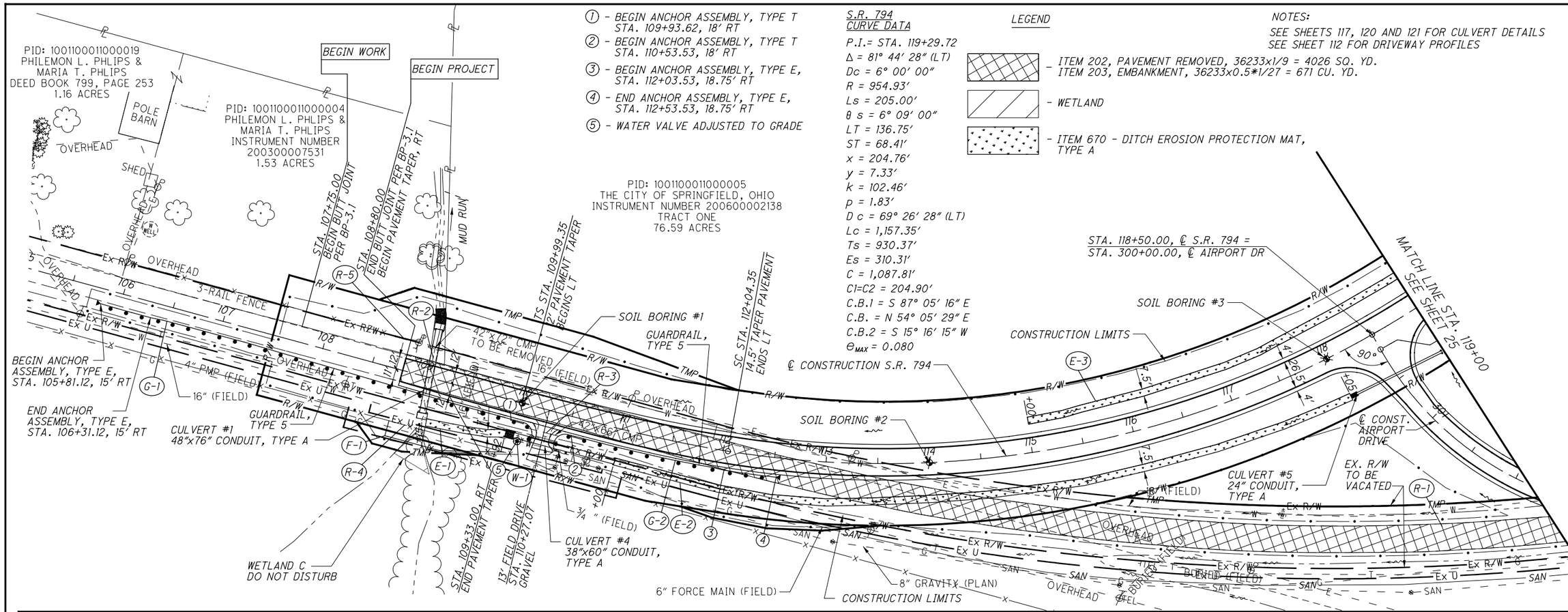

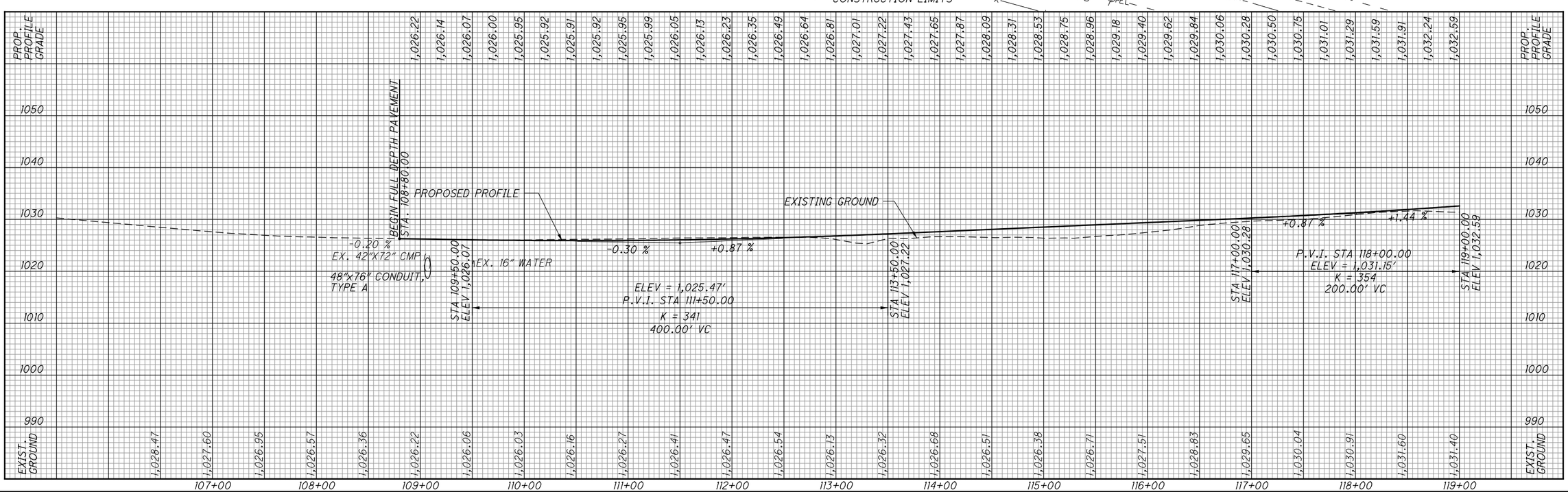

HORIZONTAL SCALE IN FEET 0 25 50 100

CALCULATED AVP
CHECKED CSR

PLAN AND PROFILE
S.R. 794 - STA. 106+50.00 TO STA. 119+00.00

CLA-794-0.60

MRyabinky
1/10/2012 9:31:48 AM
O:\CO2008\0156\C Design\CLA\78677\Roadway\Sheets\78677gp002.dgn

S.R.794 CURVE DATA

P.I.= STA. 119+29.72	p = 1.83′
Δ = 81° 44′ 28″ (LT)	D c = 69° 26′ 28″ (LT)
Dc = 6° 00′ 00″	Lc = 1,157.35′
R = 954.93′	Ts = 930.37′
Ls = 205.00′	Es = 310.31′
f s = 6° 09′ 00″	C = 1,087.81′
LT = 136.75′	C1=C2 = 204.90′
ST = 68.41′	C.B.1 = S 87° 05′ 16″ E
x = 204.76′	C.B. = N 54° 05′ 29″ E
y = 7.33′	C.B.2 = S 15° 16′ 15″ W
k = 102.46′	θ_{MAX} = 0.080

LEGEND

- ITEM 202, PAVEMENT REMOVED, 32677x1/9 = 3631 SQ. YD.
  ITEM 203, EMBANKMENT, 32677x0.4167*1/27 = 504 CU. YD.
- ITEM 670 - DITCH EROSION PROTECTION MAT, TYPE A

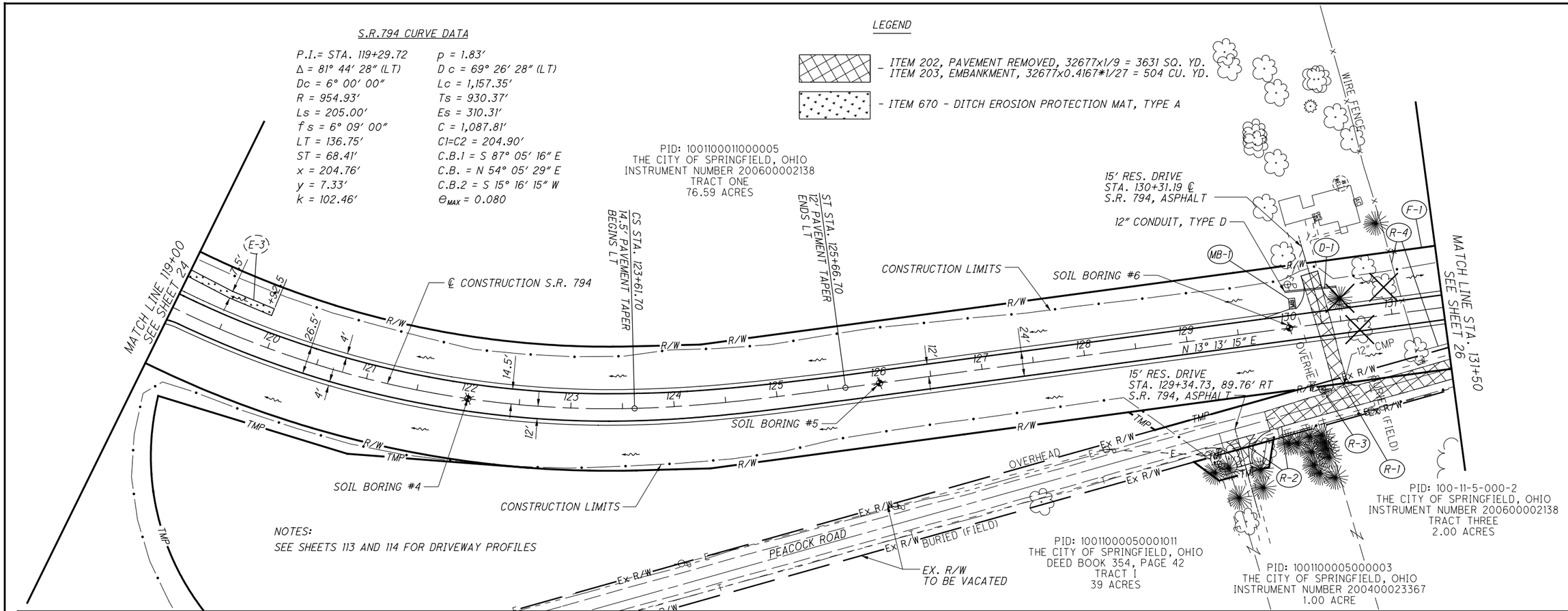

NOTES:
SEE SHEETS 113 AND 114 FOR DRIVEWAY PROFILES

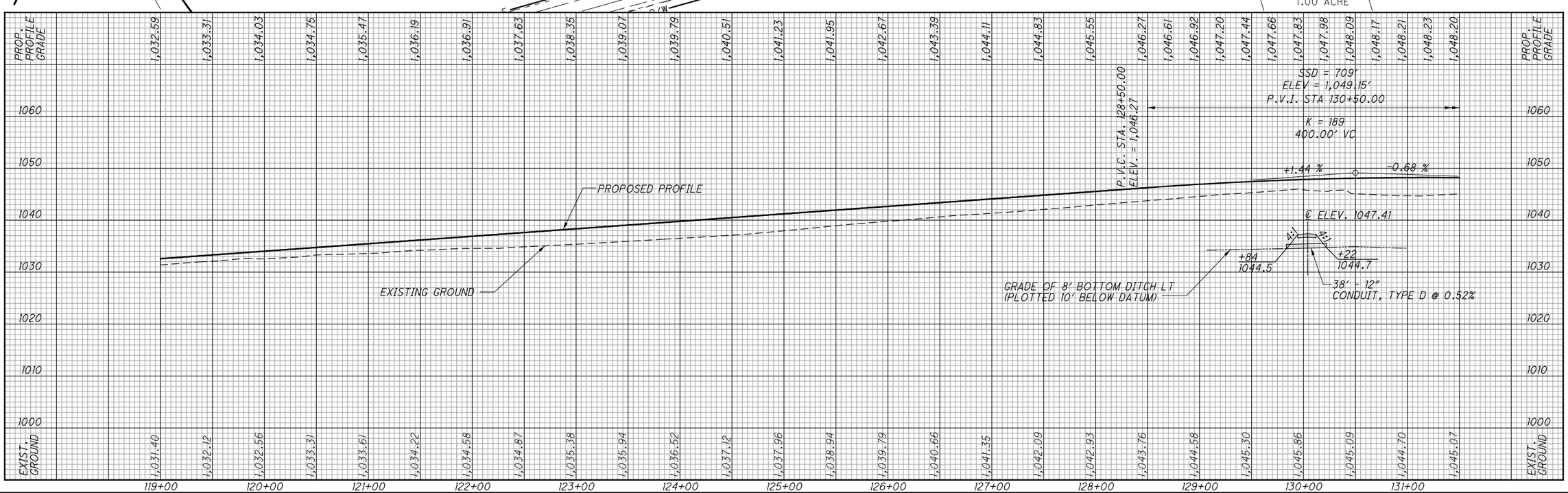

HORIZONTAL SCALE IN FEET

CALCULATED AVP
CHECKED CSR

PLAN AND PROFILE - S.R. 794
STA. 119+00.00 TO STA. 131+50.00

CLA-794-0.60

MRyabinky
7/22/2011 2:45:03 PM
O:\CO2008\0156\C Design\CLA\78677\roadway\sheets\78677gp003.dgn

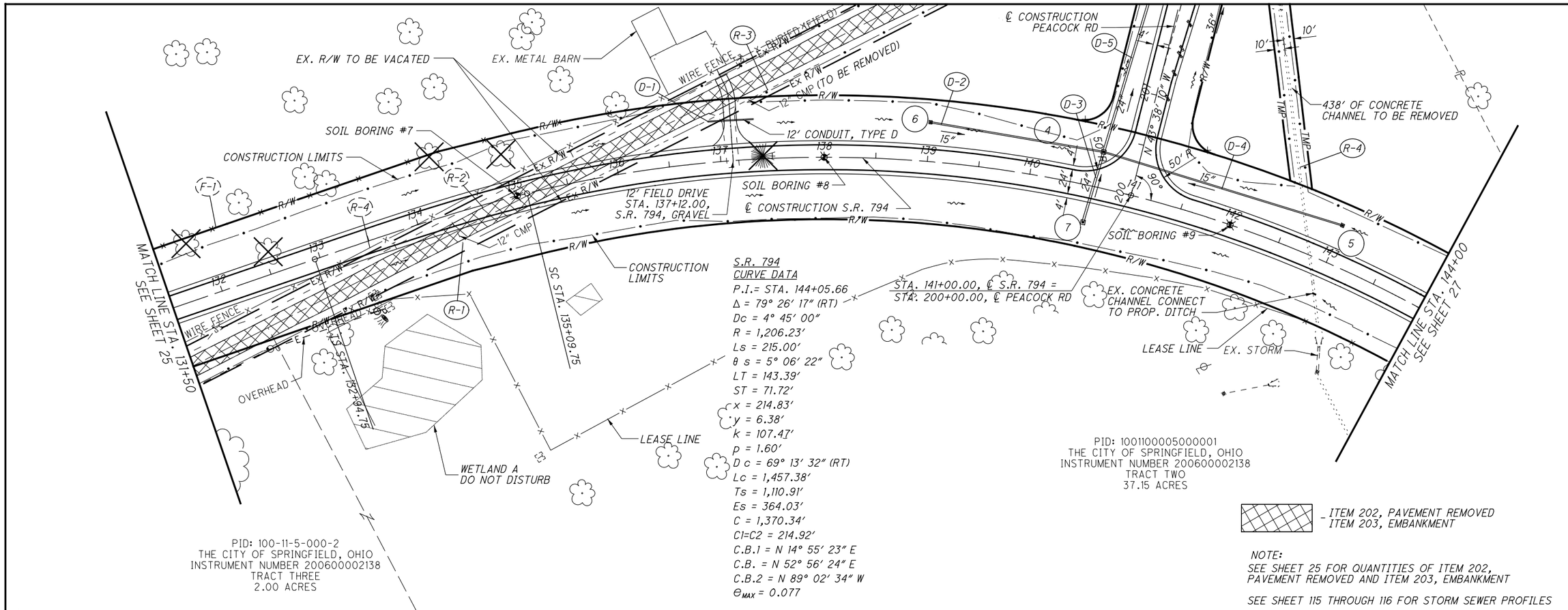

S.R. 794
CURVE DATA

P.I.= STA. 144+05.66
Δ = 79° 26′ 17″ (RT)
Dc = 4° 45′ 00″
R = 1,206.23′
Ls = 215.00′
θ s = 5° 06′ 22″
LT = 143.39′
ST = 71.72′
x = 214.83′
y = 6.38′
k = 107.41′
p = 1.60′
D c = 69° 13′ 32″ (RT)
Lc = 1,457.38′
Ts = 1,110.91′
Es = 364.03′
C = 1,370.34′
C1=C2 = 214.92′
C.B.1 = N 14° 55′ 23″ E
C.B. = N 52° 56′ 24″ E
C.B.2 = N 89° 02′ 34″ W
θ_{MAX} = 0.077

NOTE:
SEE SHEET 25 FOR QUANTITIES OF ITEM 202, PAVEMENT REMOVED AND ITEM 203, EMBANKMENT

SEE SHEET 115 THROUGH 116 FOR STORM SEWER PROFILES

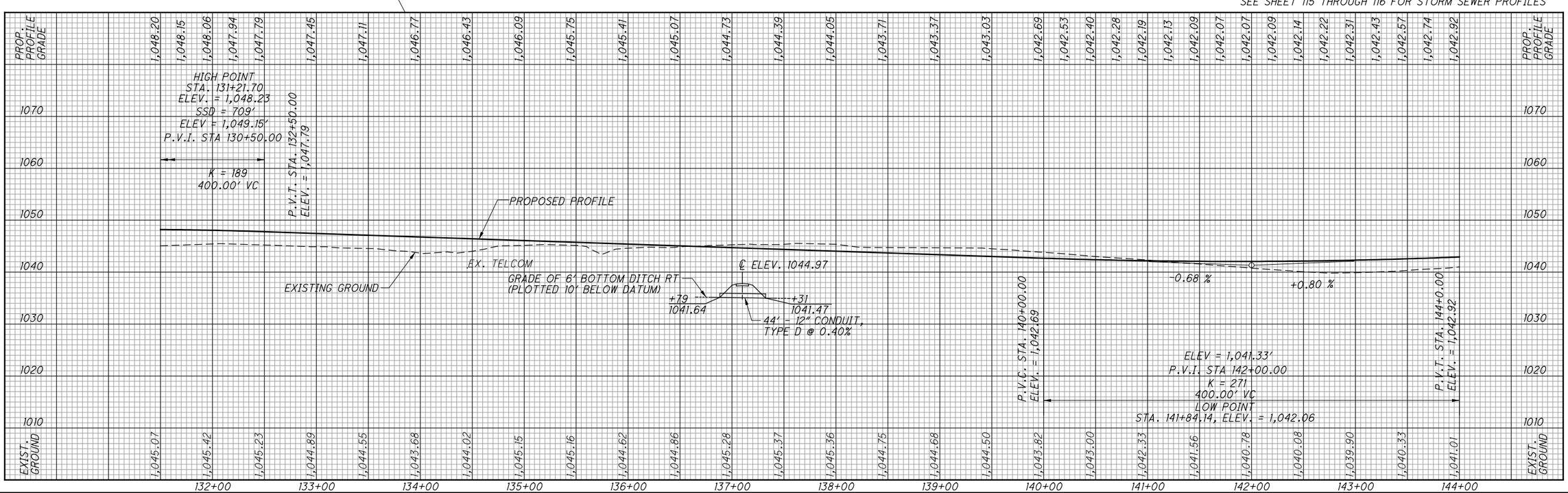

HORIZONTAL SCALE IN FEET 0 25 50 100

CALCULATED AVP
CHECKED CSR

PLAN AND PROFILE
S.R. 794 - STA. 131+50.00 TO 144+00.00

CLA-794-0.60

MRyabinky
7/22/2011 2:45:07 PM
O:\CO2008\0156\C Design\CLA\78677\roadway\sheets\78677gp004.dgn

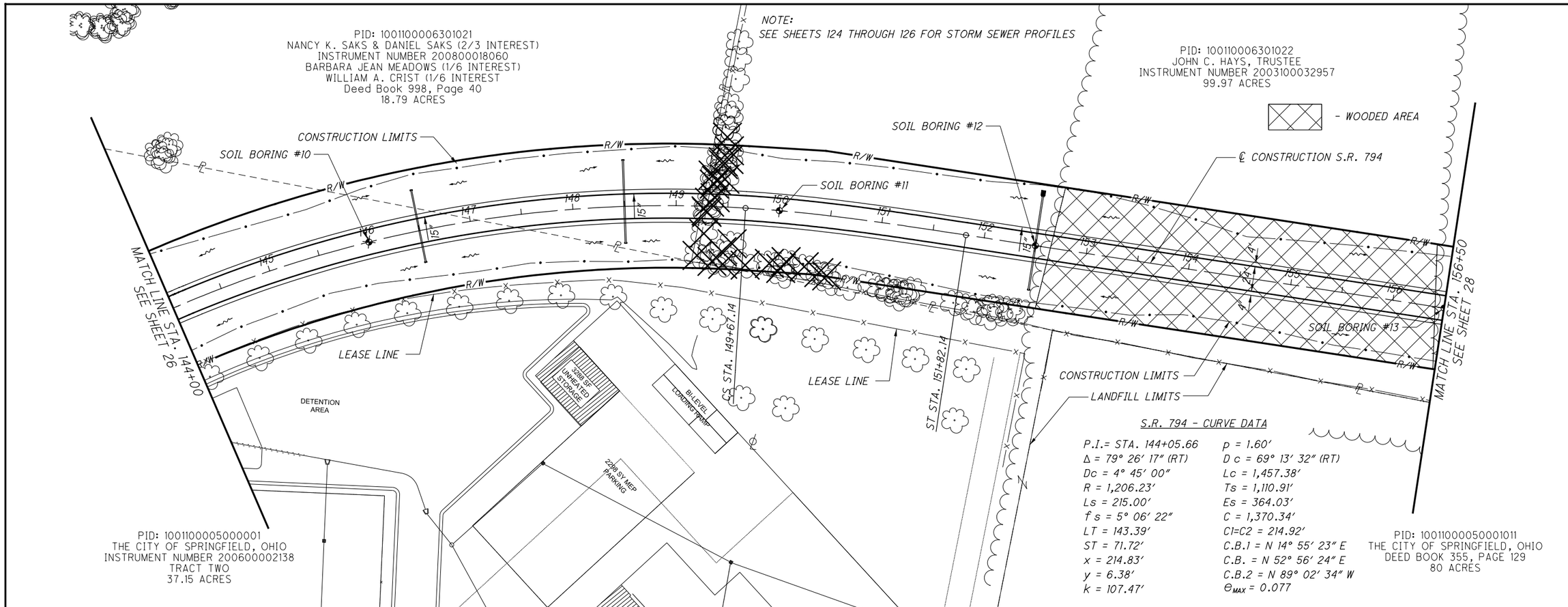

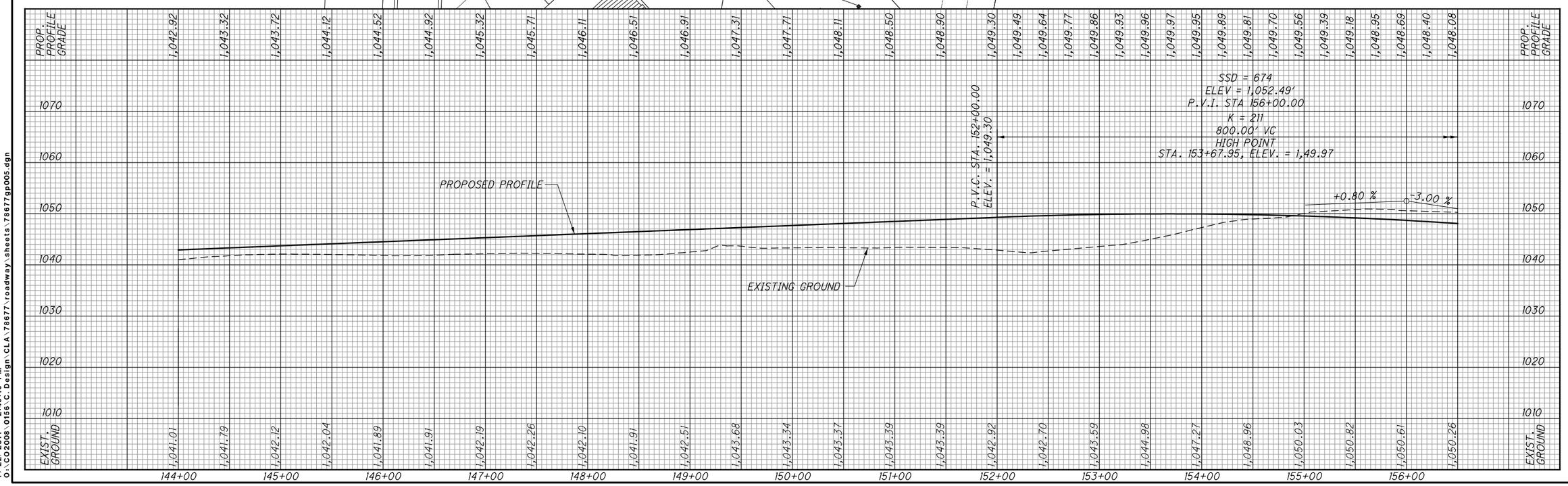

HORIZONTAL SCALE IN FEET
0 25 50 100

CALCULATED AVP
CHECKED CSR

PLAN AND PROFILE
S.R. 794 - STA. 144+00.00 TO STA. 156+50.00

CLA-794-0.60

MRyabinky
7/22/2011 2:45:16 PM
O:\CO2008\0156\C Design\CLA\78677\roadway\sheets\78677gp005.dgn

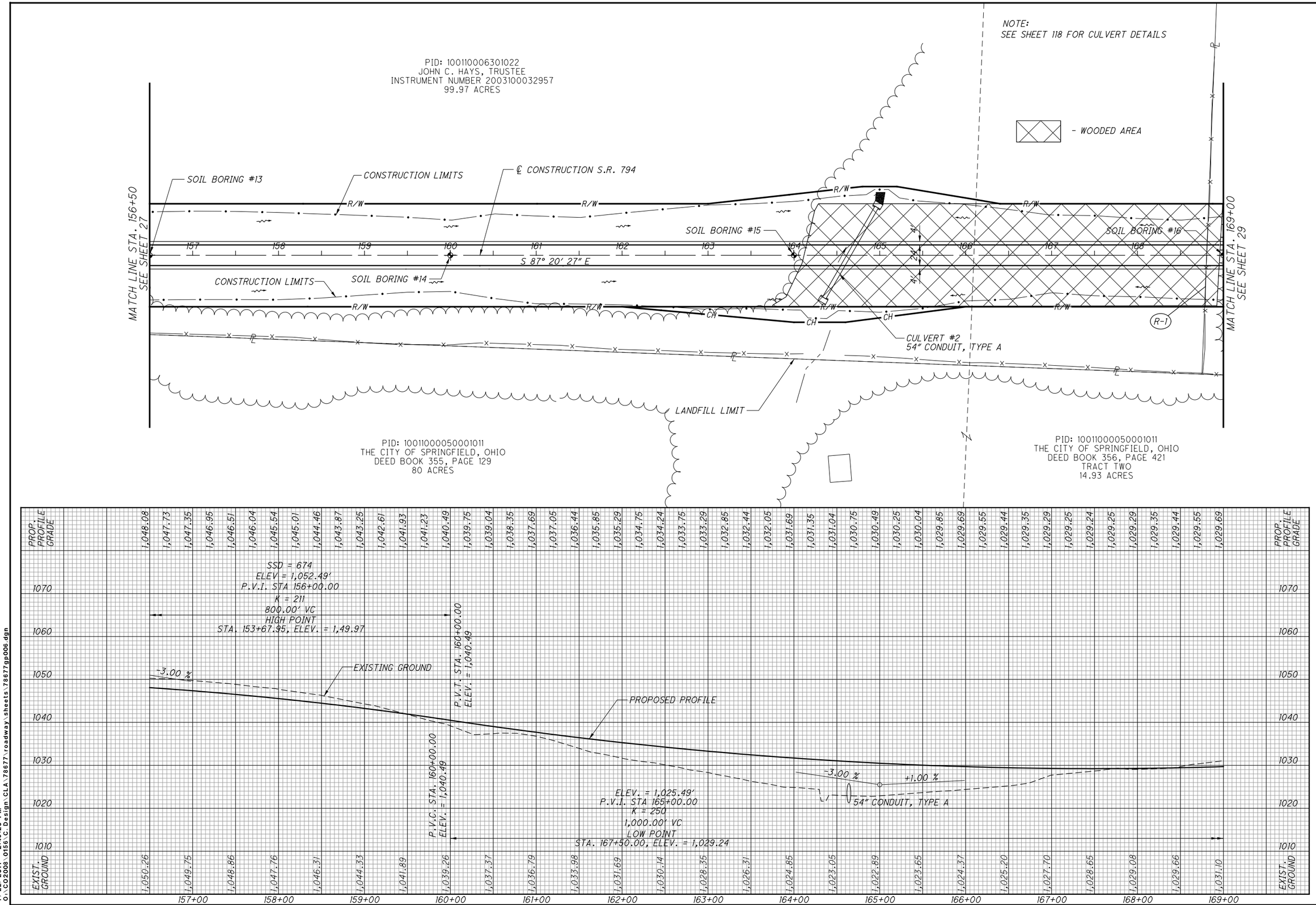

HORIZONTAL SCALE IN FEET
0 25 50 100

CALCULATED AVP
CHECKED CSR

PLAN AND PROFILE
S.R. 794 - STA. 156+50.00 TO STA. 169+00.00

CLA-794-0.60

MRyabinky
7/22/2011 2:45:20 PM
O:\C02008\0156\C-Design\CLA\78677\roadway\sheets\78677gp006.dgn

LEGEND

- ITEM 202, PAVEMENT REMOVED, 24882x1/9 = 2765 SQ. YD.
  ITEM 203, EMBANKMENT, 24882x0.5*1/27 = 461 CU. YD.
- WETLAND

NOTES:
SEE SHEET 119 FOR CULVERT DETAILS
SEE SHEET 112 FOR DRIVEWAY PROFILES

S.R. 794
CURVE DATA
P.I.= STA. 172+54.16
Δ = 13° 20′ 43″ (RT)
Dc = 3° 30′ 00″
R = 1,637.02′
T = 191.51′
L = 381.30′
E = 11.16′
C = 380.43′
C.B. = S 80° 40′ 06″ E
e_{MAX} = 0.066

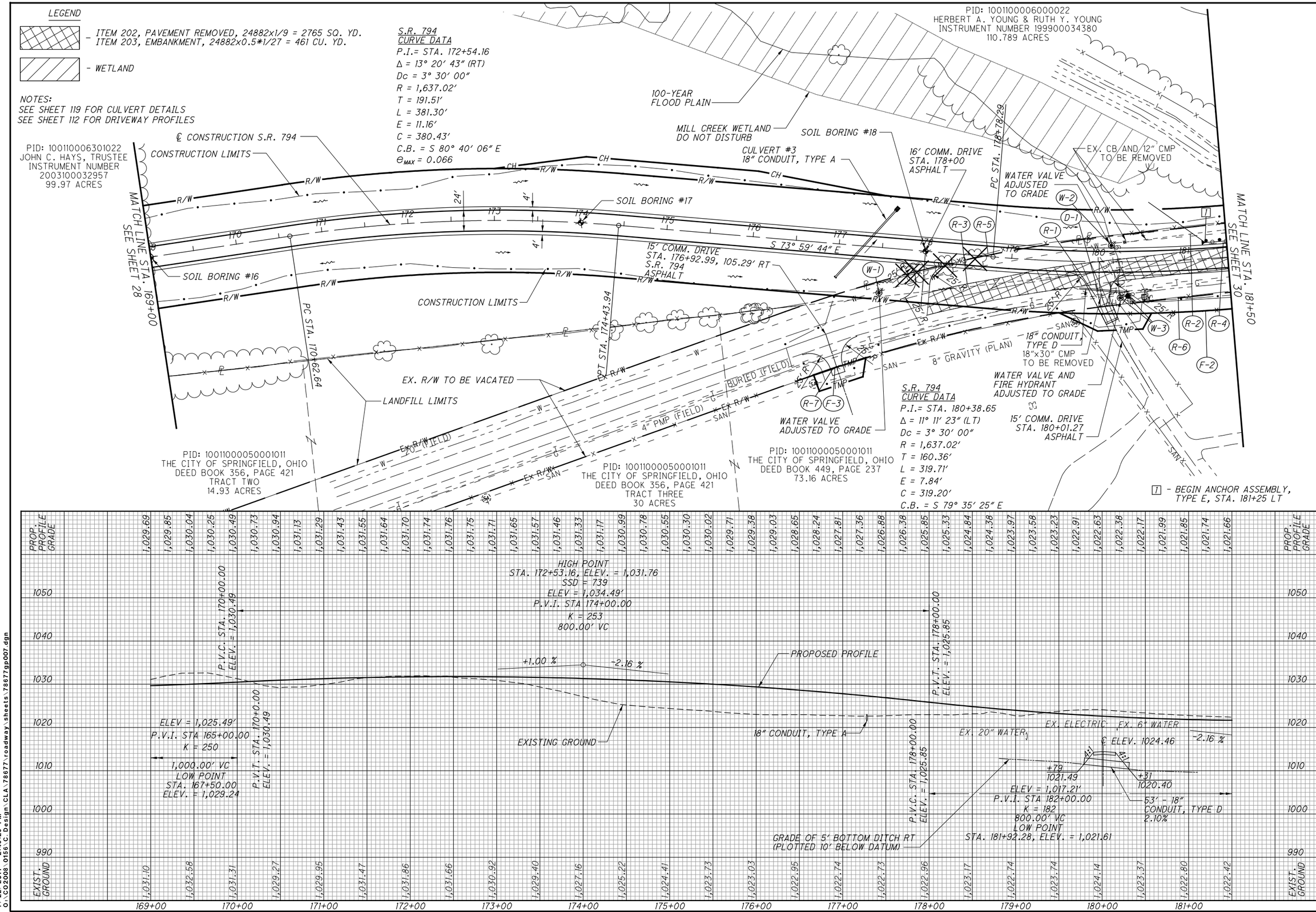

HORIZONTAL SCALE IN FEET 0 25 50 100

CALCULATED AVP
CHECKED CSR

PLAN AND PROFILE
S.R. 794 - STA. 169+00.00 TO STA. 181+50.00

CLA-794-0.60

MRyabinky 2:45:25 PM
7/22/2011
O:\CO2008\0156\C Design\CLA\78677\roadway\sheets\78677gp007.dgn