APPENDIX A

Project Mapping

Lake Metroparks-Chagrin River Park Stream Bank Stabilization Project
Project Location Map

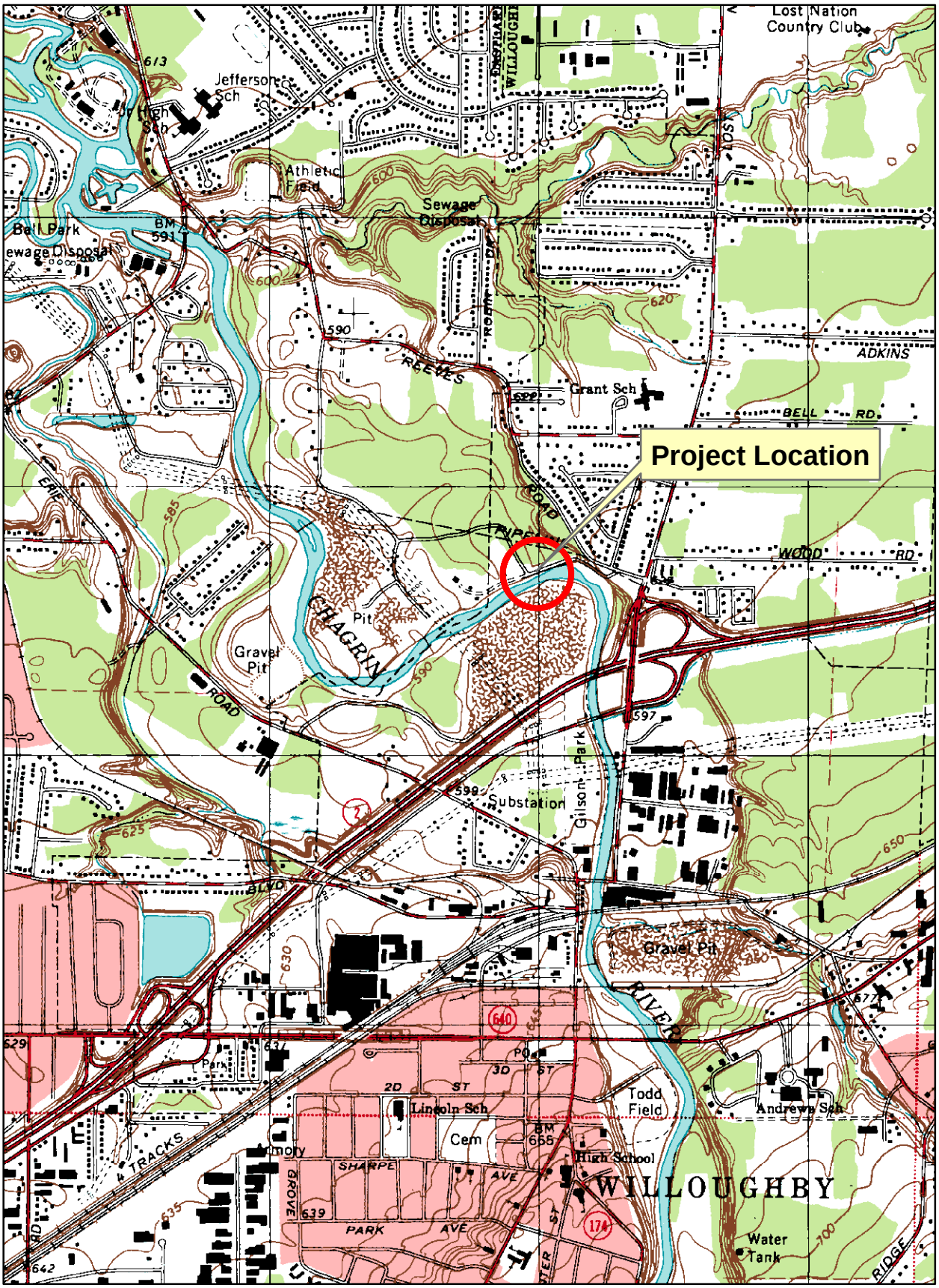

APPENDIX B

Project Site Photos

APPENDIX C

Engineering Plan Sheets

CHAGRIN RIVER PARK
STREAM BANK STABILIZATION WALL
BID NO. 2011-032
LAKE COUNTY, OHIO

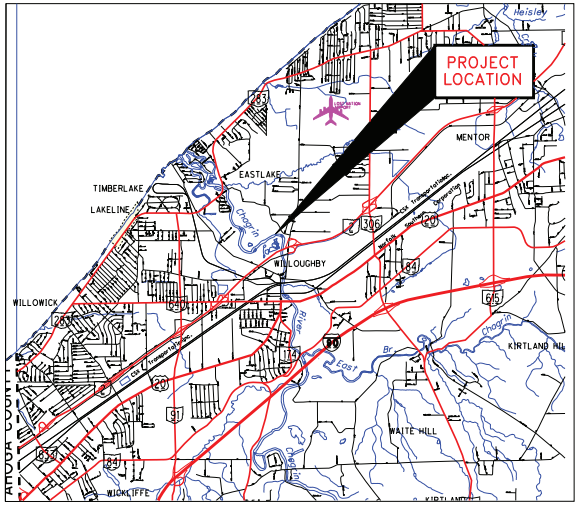

VICINITY MAP

1 0 1 2

SCALE IN MILES

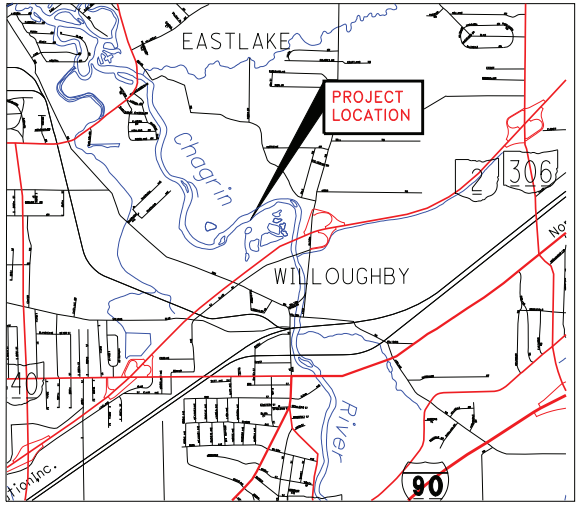

LOCATION MAP

2000 0 2000 4000

SCALE IN FEET

N

INDEX OF SHEETS

TITLE SHEET 1
SITE PLAN 2
GENERAL SUMMARY AND GENERAL NOTES 3
WALL TYPICAL SECTION 4
WALL DETAILS 5-6
TIE-IN TRENCH DETAIL 7-8
CROSS SECTIONS 9-12
FENCE DETAIL 13
FORM LINER DETAILS & STAIN SPECIFICATION 14-15

2011 SPECIFICATIONS

THE STANDARD SPECIFICATIONS OF THE STATE OF OHIO, DEPARTMENT OF TRANSPORTATION, INCLUDING CHANGES AND SUPPLEMENTAL SPECIFICATIONS LISTED IN THE PROPOSAL SHALL GOVERN THIS IMPROVEMENT.

UNDERGROUND UTILITIES
TWO WORKING DAYS
BEFORE YOU DIG
Call 800-362-2764 (Toll Free)
OHIO UTILITIES PROTECTION SERVICE
NON-MEMBERS
MUST BE CALLED DIRECTLY

ENGINEERS SEAL:

STATE OF OHIO
THOMAS LOUIS MONACO
E-70348
REGISTERED
PROFESSIONAL ENGINEER

SIGNED:
DATE: 5-24-11

THIS DRAWING IS AND SHALL REMAIN THE PROPERTY OF GANNETT FLEMING ENGINEERS AND ARCHITECTS, P.C. ANY MISUSE, REUSE, ALTERATIONS, ADDITIONS, AND/OR DELETIONS OF THESE DRAWINGS ON PROJECT EXTENSIONS OR OTHER PROJECTS SHALL BE AT THE USER'S SOLE RISK AND WITHOUT LIABILITY TO GANNETT FLEMING ENGINEERS AND ARCHITECTS, P.C. IN THE EVENT THAT A CONFLICT ARISES BETWEEN THE SEALED DRAWINGS AND THE ELECTRONIC FILES, THE SEALED DRAWINGS WILL GOVERN.

© GANNETT FLEMING ENGINEERS AND ARCHITECTS, PC

DESCRIPTION	DATE	BY
REVISIONS		

DESIGNED	CADD	SCALE
TLM	TLM	AS SHOWN
CHECKED	APPROVED	APPROVED
MWW	MWW	XXX

Gannett Fleming
AKRON, OHIO

CHAGRIN RIVER PARK
STREAM BANK STABILIZATION

TITLE SHEET

053136
DATE 4-28-11

1

5/23/2011 5:34:09 PM
G:\053136 - LAKE METROPARKS-CHAGRIN RIVER PARK-AKRON\E. PRJ WRK\A. CADD\01_53136TITLE.DGN

BENCH MARK - BM

NE CORNER OF TOP OF WING WALL AT NORTH END OF FOOT BRIDGE OVER CHAGRIN RIVER.

ELEVATION = 100.00 ASSUMED

STATE OF OHIO
TIMOTHY J. BRIGGS
7495
REGISTERED SURVEYOR

TRACT 1
SURVEYING, Ltd.
815 E. TALLMADGE AVE.
AKRON, OH 44310
tract1surveying.com
330-696-8720

CP2 - CONTROL POINT NO. 2

5/8" REBAR WITH BLUE CAP SET FLUSH AT SE CORNER OF FOOTBRIDGE.

N:4759.90
E:5000.00
ELEV: 101.38

N:5020.30
E:4974.00

CP1 - CONTROL POINT NO. 1

5/8" REBAR WITH BLUE CAP SET FLUSH AT NE CORNER OF FOOTBRIDGE.

N:5000.00
E:5000.00
ELEV. 99.34

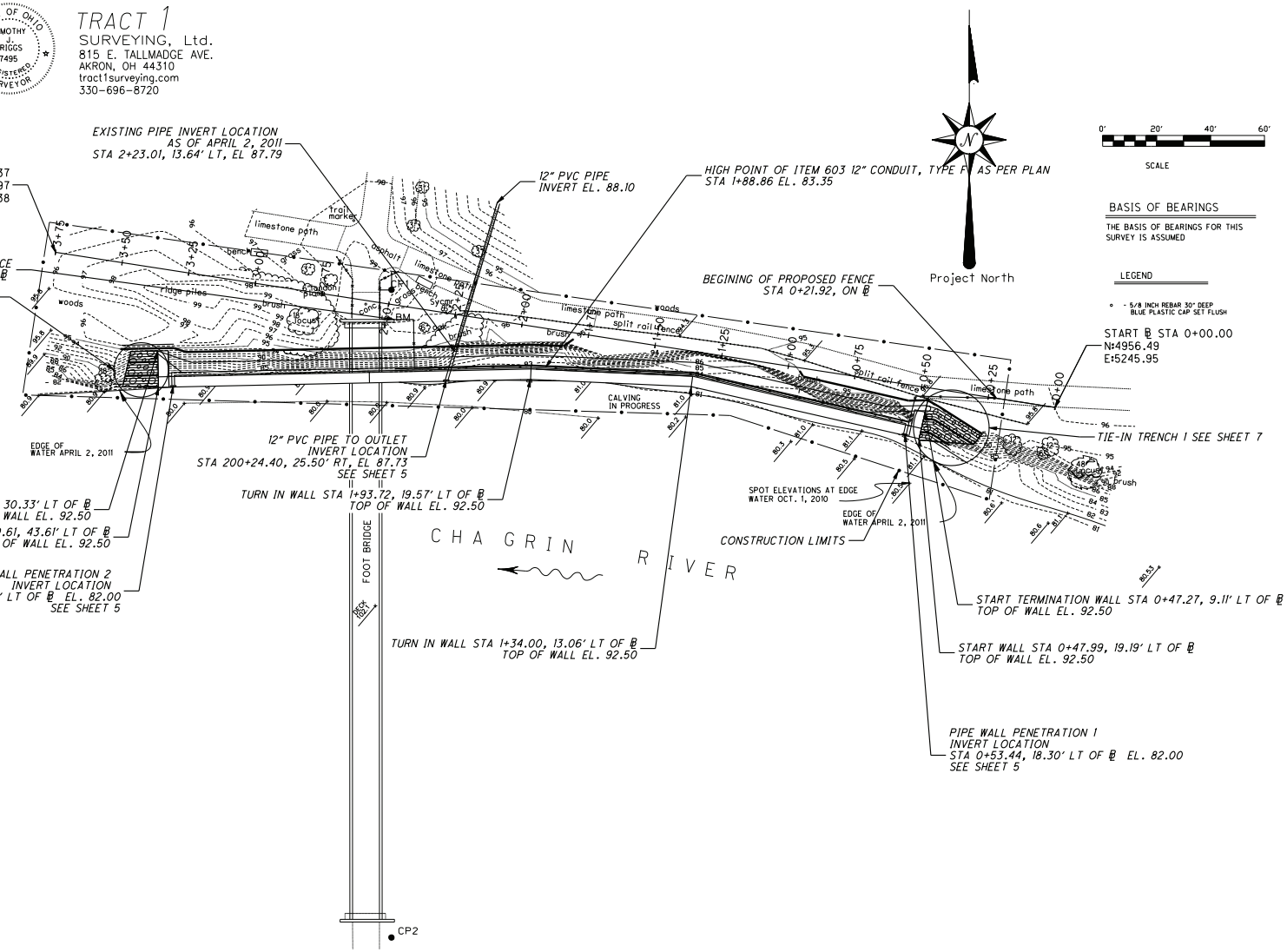

Project North

0' 20' 40' 60'
SCALE

BASIS OF BEARINGS

THE BASIS OF BEARINGS FOR THIS SURVEY IS ASSUMED

LEGEND

- 5/8 INCH REBAR 30" DEEP BLUE PLASTIC CAP SET FLUSH

UNDERGROUND UTILITIES
TWO WORKING DAYS
BEFORE YOU DIG
1-800-362-2764
OHIO UTILITIES PROTECTION SERVICE
NON-MEMBERS
MUST BE CALLED DIRECTLY

THIS DRAWING IS AND SHALL REMAIN THE PROPERTY OF GANNETT FLEMING ENGINEERS AND ARCHITECTS, P.C. ANY MISUSE, REUSE, ALTERATIONS, ADDITIONS, AND/OR DELETIONS OF THESE DRAWINGS ON PROJECT EXTENSIONS OR OTHER PROJECTS SHALL BE AT THE USER'S SOLE RISK AND WITHOUT LIABILITY TO GANNETT FLEMING ENGINEERS AND ARCHITECTS, P.C. IN THE EVENT THAT A CONFLICT ARISES BETWEEN THE SEALED DRAWINGS AND THE ELECTRONIC FILES, THE SEALED DRAWINGS WILL GOVERN.

DESCRIPTION	DATE	BY
REVISIONS		

DESIGNED	CADD	SCALE
TLM	TLM	1" = 20'
CHECKED	APPROVED	APPROVED
MWW	MWW	XXX

Gannett Fleming
AKRON, OHIO

CHAGRIN RIVER PARK
STREAM BANK STABILIZATION

SITE PLAN

JOB No. 053136
DATE 4-27-11
SHEET No. 2

© GANNETT FLEMING ENGINEERS AND ARCHITECTS, PC

5/9/2011 10:26:09 AM
G:\053136 - LAKE METROPARKS-CHAGRIN RIVER PARK-AKRON\E. PRJ WRK\A. CADD\02_53136PLAN.DGN

NOTES:

ITEM 603 12" CONDUIT, TYPE F, AS PER PLAN

THIS PIPE WILL CONSIST OF A 12 INCH DIAMETER, PERFORATED, POLYVINYL CHLORIDE PLASTIC PIPE (707.41), FITTINGS, AND INCLUDE 3 TIDEFLEX 12 INCH DIAMETER WATERFEX CHECK VALVES. CHECK VALVES ARE INCIDENTAL TO THE PIPE. THE PIPE SHALL BE PLACED AT THE ELEVATIONS SHOWN ON THE CROSS SECTIONS AND GRADE AT 1% BETWEEN ILLUSTRATED CROSS SECTIONS.

METHOD OF MEASUREMENT

THIS ITEM SHALL BE MEASURED PER UNIT FOOT OF LENGTH

PAYMENT

THIS ITEM WILL BE PAID AT THE CONTRACT UNIT PRICE AND SHALL INCLUDE ALL LABOR, EQUIPMENT, AND MATERIALS NECESSARY TO COMPLETE THE WORK. THE BASIS OF PAYMENT WILL BE AS FOLLOWS

ITEM	DESCRIPTION	UNIT
603	ITEM 603 12" CONDUIT, TYPE F, AS PER PLAN	FT

ITEM 510 DOWEL HOLES WITH NONSHRINK, NONMETALLIC GROUT, AS PER PLAN

THIS ITEM SHALL BE INSTALLED AS PER SECTION 510 OF ODOT CSM WITH THE FOLLOWING EXCEPTIONS.

1. THE DOWEL HOLES WILL BE ADVANCED IN THE LIMESTONE BEDROCK AT THE LINES AND GRADES SHOWN IN THESE PLANS.
2. THE BEDROCK MUST BE CLEANED IN ACCORDANCE TO THE FOUNDATION PREPARATION SECTION HEREIN, AND APPROVED BY THE ENGINEER PRIOR TO GROUTING.
3. THE DOWEL WILL BE AN EPOXY COATED REBAR SPECIFIED IN THE BAR CHART AS Y801.
4. THE DOWELS MUST PENETRATE AT LEAST 18 INCHES INTO THE BEDROCK.

METHOD OF MEASUREMENT

THIS ITEM SHALL BE MEASURED PER EACH

PAYMENT

THIS ITEM WILL BE PAID AT THE CONTRACT UNIT PRICE AND SHALL INCLUDE ALL LABOR, EQUIPMENT, AND MATERIALS NECESSARY TO COMPLETE THE WORK. THE BASIS OF PAYMENT WILL BE AS FOLLOWS

ITEM	DESCRIPTION	UNIT
510	DOWEL HOLES WITH NONSHRINK, NONMETALLIC GROUT, AS PER PLAN	EACH

FOUNDATION PREPARATION

THIS SPECIFICATION IS INTENDED TO PREPARE THE FOUNDATIONS SO WALL CONCRETE IS PLACED ON CLEAN, SOUND, LIMESTONE ROCK (ROCK MASS SHEAR STRENGTH OF 155 KSF +/-). EXCAVATE SOIL AND WEAK ROCK (SHALE AND/OR HIGHLY FRACTURED ROCK) TO LINES AND GRADES SHOWN ON THESE PLANS. WHEN EXCAVATION HAS BEEN COMPLETED TO LINES SHOWN, THE FINAL GRADE WILL BE ESTABLISHED WHERE SOUND BEDROCK IS FOUND. THE ROCK SURFACE SHALL BE GIVEN A PRELIMINARY CLEANUP. THIS CLEANUP SHALL CONSIST OF REMOVING ALL LOOSE ROCK, GRAVEL, SAND, SILT, CLAY, ALGAE, MOSS, OR OTHER ORGANIC MATTER WITH BRUSHES, BROOMS, AND WATER JETS UNDER HIGH PRESSURE (1500 PSI+) IF ANY AREAS ARE DEEMED UNSATISFACTORY BY THE ENGINEER, EXCAVATION SHALL CONTINUE AND THE CLEANING PROCESS REPEATED. ANY WIDE (>2-INCHES WIDTH) CRACKS OR SEAMS SHALL BE CLEANED TO THE DEPTH AND WIDTH THAT SATISFIES THE ENGINEER.

BACKFILL OF WALL

A GROSS VEHICLE WEIGHT RATING GREATER THAN 2000 POUNDS ARE NOT PERMITTED.

AFTER THE INSTALLATION OF THE WALL, INSTALL ITEM 603, 12" CONDUIT, TYPE F, AS PER PLAN, AS SPECIFIED IN THE PLANS. BACKFILL THE AREA BETWEEN THE WALL AND THE SLOPE WITH ITEM 518, POROUS BACKFILL WITH FILTER FABRIC, TO ELEVATION 85.0.

PLACE ITEM 204 GEOTEXTILE FABRIC, TYPE B THE ENTIRE WIDTH BETWEEN THE WALL AND SLOPE. PLACE AND COMPACT AN 8 INCH DEEP, 18 INCH WIDE LIFT OF ITEM 518 POROUS BACKFILL WITH FILTER FABRIC. FILL REMAINING WIDTH WITH AN 8-INCH LIFT OF ITEM 304, AGGREGATE BASE. COMPACTION EQUIPMENT IS LIMITED TO A GROSS VEHICLE WEIGHT RATING LESS THAN 2000 POUNDS. REPEAT THIS FOR EACH LIFT SHOWN ON THE TYPICAL SECTION.

EXISTING 12" CONCRETE PIPE

EXTEND EXISTING PIPE THROUGH PROPOSED WALL MATCHING EXISTING PIPE SLOPE. PIPE MAY CAST IN THE WALL. IF THE PIPE PATH INTERFERES WITH ANCHOR LOCATIONS THE AFFECTED ANCHORS MAY BE SHIFTED UP 6" FROM THE SPECIFIED LOCATION WITH THE ENGINEER'S APPROVAL. THIS WORK IS INCIDENTAL TO ITEM 511 CLASS C CONCRETE.

ITEM 607 FENCE MISC.: SPLIT RAIL FENCE

THIS PIPE WILL CONSIST OF A SPLIT RAIL FENCE WITH DIMENSIONS AS PER SHEET 13.

METHOD OF MEASUREMENT

THIS ITEM SHALL BE MEASURED PER UNIT FOOT OF LENGTH.

PAYMENT

THIS ITEM WILL BE PAID AT THE CONTRACT UNIT PRICE AND SHALL INCLUDE ALL LABOR, EQUIPMENT, AND MATERIALS NECESSARY TO COMPLETE THE WORK. THE BASIS OF PAYMENT WILL BE AS FOLLOWS

ITEM	DESCRIPTION	UNIT
607	FENCE, MISC.: SPLIT RAIL FENCE	FT

ITEM 530 SECIAL FORM LINER

SEE SHEET 14

GENERAL SUMMARY

ITEM	EXTENSION	UNITS	QUANTITY	DESCRIPTION
203	10000	CU YD	255	EXCAVATION
203	20000	CU YD	223	EMBANKMENT
204	50000	SQ YD	283	GEOTEXTILE FABRIC, TYPE D
204	50000	SQ YD	2160	GEOTEXTILE FABRIC, TYPE B
304	20000	CU YD	283	AGGREGATE BASE
509	10000	POUND	5988	EPOXY COATED REINFORCING STEEL
510	10001	EACH	307	DOWEL HOLES WITH NONSHRINK, NONMETALLIC GROUT, AS PER PLAN
511	46000	CU YD	335	CLASS C CONCRETE
518	21230	CU YD	189	POROUS BACKFILL WITH FILTER FABRIC
SPEC	530.13000	SQ FT	3300	SPECIAL - FORM LINER
601	32300	CU YD	75	ROCK CHANNEL PROTECTION, TYPE A WITH FILTER
603	05201	FT	310	12" CONDUIT, TYPE F, AS PER PLAN
607	98000	FT	250	FENCE MISC.: SPLIT RAIL FENCE
659	01000	SQ YD	381	SEEDING & MULCHING
659	00300	CU YD	44	TOPSOIL
659	20000	TON	0.03	COMMERCIAL FERTILIZER
659	31000	ACRE	0.08	LIME
659	35000	M GAL	0.002	WATER
659	15000	SQ YD	65	INTER-SEEDING

THIS DRAWING IS AND SHALL REMAIN THE PROPERTY OF GANNETT FLEMING ENGINEERS AND ARCHITECTS, P.C. ANY REUSE, REUSE, ALTERATIONS, ADDITIONS, AND/OR DELETIONS OF THESE DRAWINGS ON PROJECT EXTENSIONS OR OTHER PROJECTS SHALL BE AT THE USER'S SOLE RISK AND WITHOUT LIABILITY TO GANNETT FLEMING ENGINEERS AND ARCHITECTS, P.C. IN THE EVENT THAT A CONFLICT ARISES BETWEEN THE SEALED DRAWINGS AND THE ELECTRONIC FILES, THE SEALED DRAWINGS WILL GOVERN.

© GANNETT FLEMING ENGINEERS AND ARCHITECTS, PC

DESCRIPTION	DATE	BY
REVISIONS		

DESIGNED	CADD	SCALE
TLM	TLM	NONE
CHECKED	APPROVED	APPROVED
MWW	MWW	XXX

Gannett Fleming

AKRON, OHIO

CHAGRIN RIVER PARK

STREAM BANK STABILIZATION

NOTES & GENERAL SUMMARY

JOB No. 053136

DATE 4-17-11

SHEET No. 3

5/24/2011 10:19:04 AM
G:\053136 - LAKE METROPARKS-CHAGRIN RIVER PARK AKRON\E, PRJ APRV\A, CADD\03.53136 NOTES AND SUMMARY.DGN

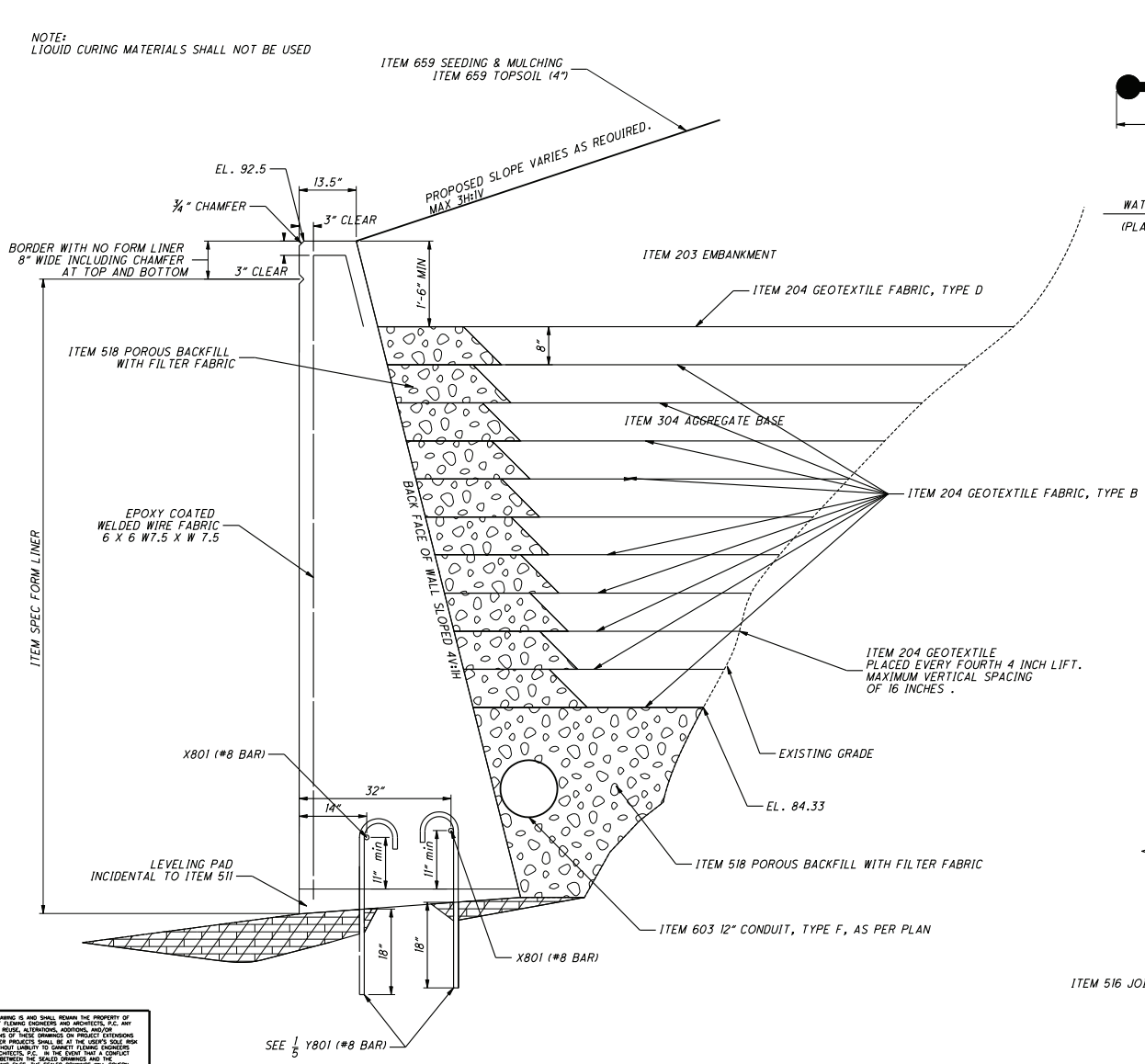

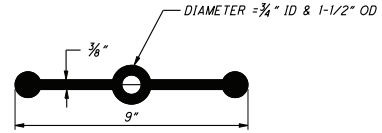

GREENSTREAK WATER STOP
DUMBELL WITH CENTER BULB
GSK753

WATER STOP (1/4)
(PLAN) N.T.S.

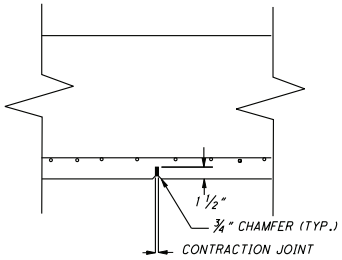

CONTRACTION JOINT SPACE AT A MAXIMUM OF 30' CC

CONTRACTION JOINT (2/4)
(PLAN) N.T.S.

NOTE:
PLACE CONSTRUCTION JOINTS AT BOTH TURNS IN THE WALL. IN AREAS WHERE THE WALL IS LONGER THAN 60 FEET PLACE AN ADDITIONAL CONSTRUCTION JOINT AT MAXIMUM OF 60 FOOT SPACING.

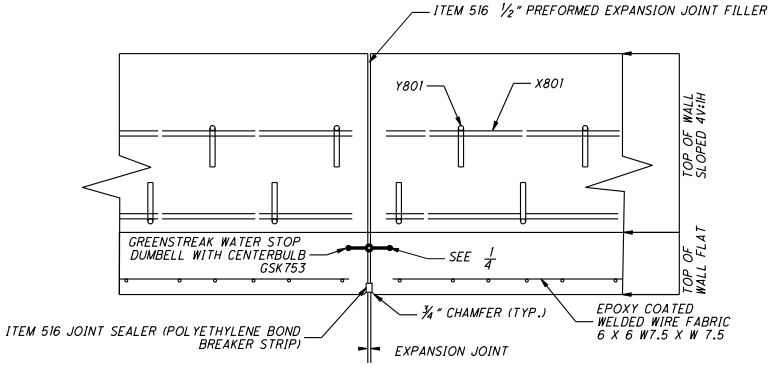

TYPICAL CONSTRUCTION JOINT (3/4)
(PLAN) N.T.S.

THIS DRAWING IS AND SHALL REMAIN THE PROPERTY OF GANNETT FLEMING ENGINEERS AND ARCHITECTS, P.C. ANY MISUSE, REUSE, ALTERATIONS, ADDITIONS, AND/OR DELETIONS OF THESE DRAWINGS ON PROJECT EXTENSIONS OR OTHER PROJECTS SHALL BE AT THE USER'S SOLE RISK AND WITHOUT LIABILITY TO GANNETT FLEMING ENGINEERS AND ARCHITECTS, P.C. IN THE EVENT THAT A CONFLICT ARISES BETWEEN THE SEALED DRAWINGS AND THE ELECTRONIC FILES, THE SEALED DRAWINGS WILL GOVERN.

DESCRIPTION	DATE	BY
REVISIONS		

DESIGNED	CADD	SCALE
TLM	TLM	N.T.S.
CHECKED	APPROVED	APPROVED
MWW	MWW	XXX

Gannett Fleming
AKRON, OHIO

CHAGRIN RIVER PARK
STREAM BANK STABILIZATION

TYPICAL SECTION
RETAINING WALL

JOB No. 053136
DATE 5-23-11
SHEET No. 4

© GANNETT FLEMING ENGINEERS AND ARCHITECTS, PC

5/24/2011 10:17:57 AM
G:\053136 - LAKE METROPARKS-CHAGRIN RIVER PARK-AKRON\E. PRJ WRK\A. CADD\04-08&13 WALL DETAILS.DGN

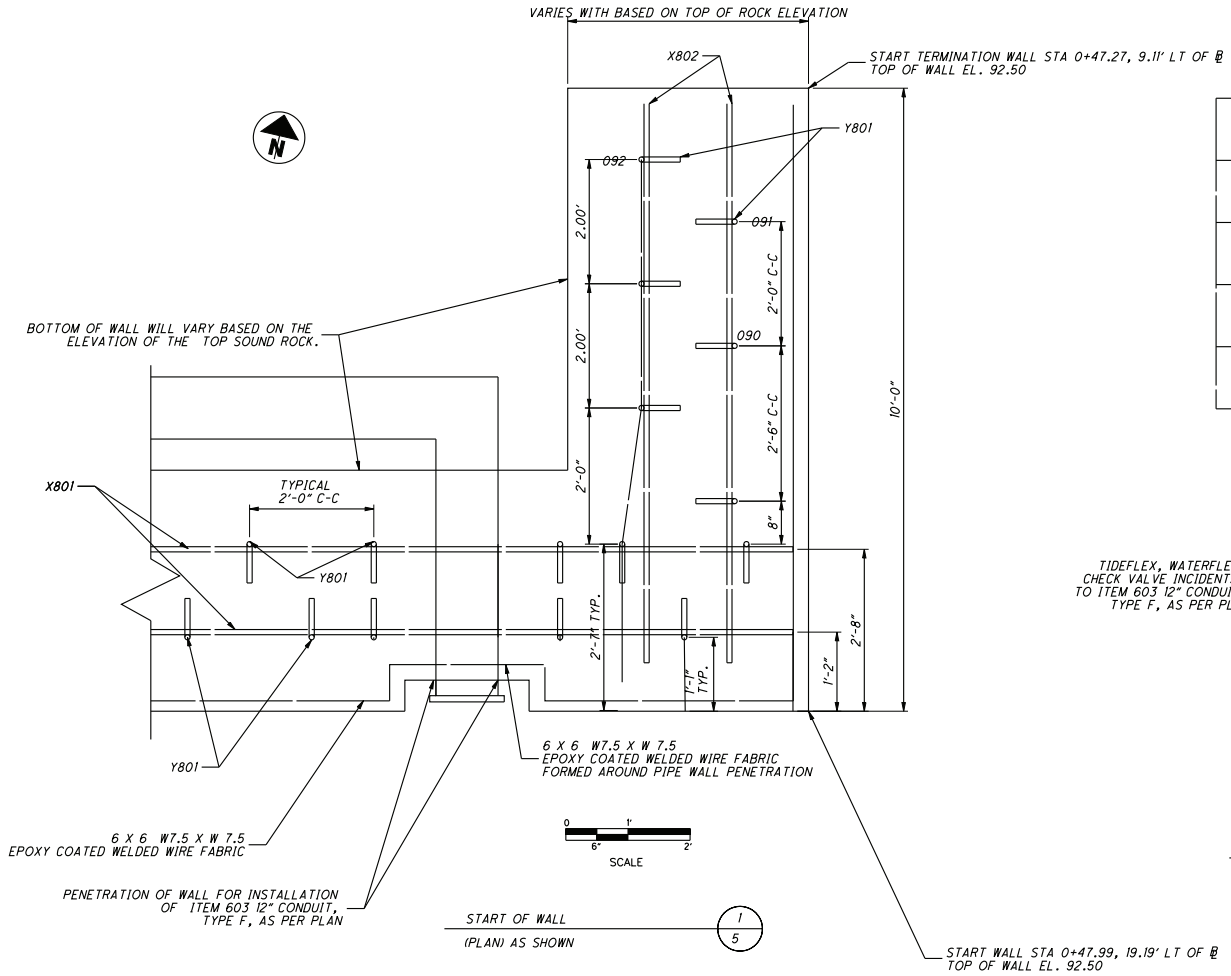

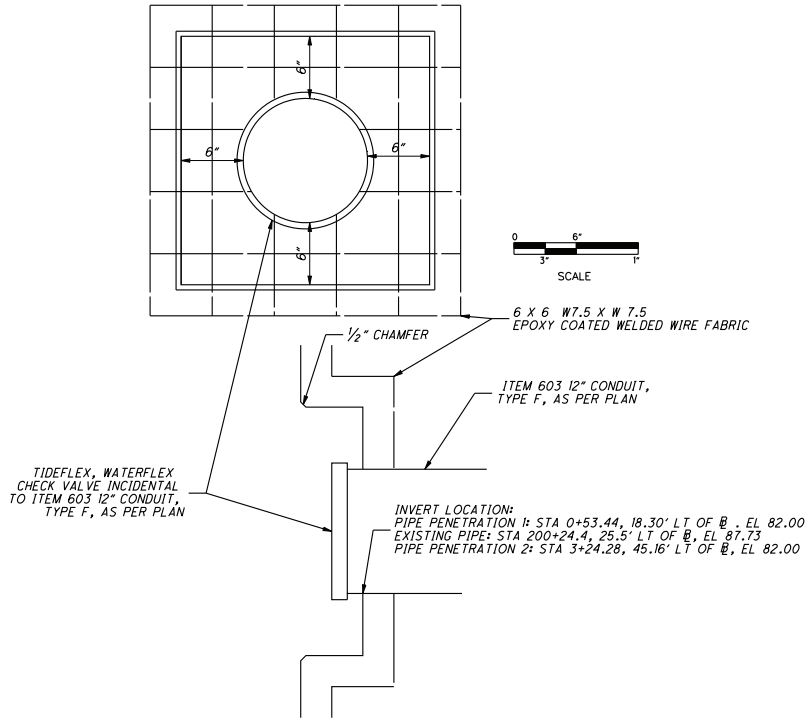

5/4/2011 11:19:08 AM
C:\DOCUMENTS AND SETTINGS\MONACO\DESKTOP\METRO PARKS\053136 - LAKE METROPARKS CHAGRIN RIVER PARK AKRON\C, PRJ WRK\A, CADD\04 08 WALL DETAILS.DGN

THIS DRAWING IS AND SHALL REMAIN THE PROPERTY OF GANNETT FLEMING ENGINEERS AND ARCHITECTS, P.C. ANY REUSE, REUSE, ALTERATIONS, ADDITIONS, AND/OR DELETIONS OF THESE DRAWINGS ON PROJECT EXTENSIONS OR OTHER PROJECTS SHALL BE AT THE USER'S SOLE RISK AND WITHOUT LIABILITY TO GANNETT FLEMING ENGINEERS AND ARCHITECTS. IN THE EVENT THAT A CONFLICT ARISES BETWEEN THE SEALED DRAWINGS AND THE ELECTRONIC FILES, THE SEALED DRAWINGS WILL GOVERN.

© GANNETT FLEMING ENGINEERS AND ARCHITECTS, PC

DESCRIPTION	DATE	BY
REVISIONS		

DESIGNED	CADD	SCALE
TLM	TLM	AS SHOWN
CHECKED	APPROVED	APPROVED
MWW	MWW	XXX

Gannett Fleming
AKRON, OHIO

CHAGRIN RIVER PARK
STREAM BANK STABILIZATION

WALL DETAILS

JOB No. 053136
DATE 4-17-11

SHEET No. 5

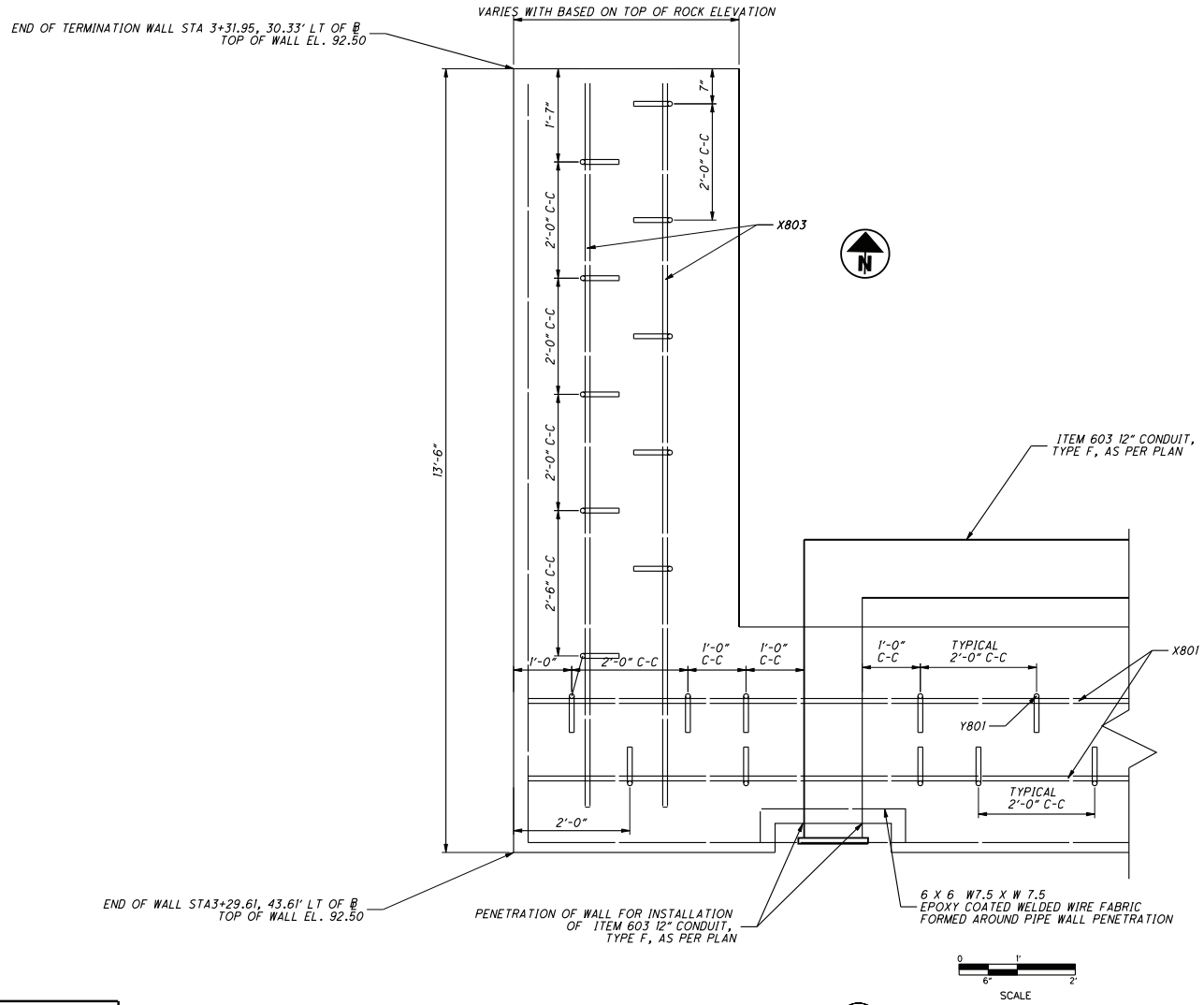

END WALL WALL (PLAN) N.T.S. — 1/6

REINFORCING BAR LIST						
	Mark	Bar	Bar Length	Shape	Quantity	Total Weight (lb)
EPOXY COATED REINFORCING STEEL	Y801	#8	4'-8"	Type 6	317	3950
	X801	#8	30'-0"	Str.	24	1923
	X802	#8	9'-0"	Str.	2	48
	X803	#8	12'-6"	Str.	2	67
EPOXY COATED WELDED WIRE FABRIC FOR REINFORCEMENT*			6 x 6 W 6.5 x W 6.5 or 6 x 6 W 7.5 x W 7.5			2040**
						5988

* INCIDENTAL TO ITEM 511 CLASS C CONCRETE
** WEIGHT EPOXY COATED WELDED WIRE FABRIC DOES NOT INCLUDE LAP

THE BAR SIZE NUMBER IS SPECIFIED ON THE PLANS IN THE BAR MARK COLUMN. THE FIRST DIGIT WHERE THREE DIGITS ARE USED, INDICATES THE BAR SIZE NUMBER. FOR EXAMPLE A DS1101 IS A NUMBER 11 BAR. BAR DIMENSION SHOWN ARE OUT TO OUT UNLESS OTHERWISE NOTED. ALL REINFORCED STEEL TO BE EPOXY COATED. THE LAP FOR #8 BAR 69 INCHES.

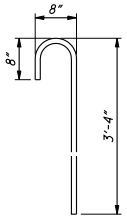

Y801 N.T.S. — 2/6

THIS DRAWING IS AND SHALL REMAIN THE PROPERTY OF GANNETT FLEMING ENGINEERS AND ARCHITECTS, P.C. ANY REUSE, REUSE, ALTERATIONS, ADDITIONS, AND/OR DELETIONS OF THESE DRAWINGS ON PROJECT EXTENSIONS OR OTHER PROJECTS SHALL BE AT THE USER'S SOLE RISK AND WITHOUT LIABILITY TO GANNETT FLEMING ENGINEERS AND ARCHITECTS. IN THE EVENT THAT A CONFLICT ARISES BETWEEN THE SEALED DRAWINGS AND THE ELECTRONIC FILES, THE SEALED DRAWINGS WILL GOVERN.

© GANNETT FLEMING ENGINEERS AND ARCHITECTS, PC

DESCRIPTION	DATE	BY
REVISIONS		

DESIGNED	CADD	SCALE
TLM	TLM	AS SHOWN
CHECKED	APPROVED	APPROVED
MWW	MWW	XXX

Gannett Fleming
AKRON, OHIO

CHAGRIN RIVER PARK
STREAM BANK STABILIZATION

WALL DETAILS

JOB No. 053136
DATE 4-27-11
SHEET No. 6

5/4/2011 11:19:18 AM
C:\DOCUMENTS AND SETTINGS\MWWACD\DESKTOP\METRO PARKS\053136 - LAKE METROPARKS CHAGRIN RIVER PARK AKRON\C. PRJ WRK\A. CADD\04 @B WALL DETAILS.DGN

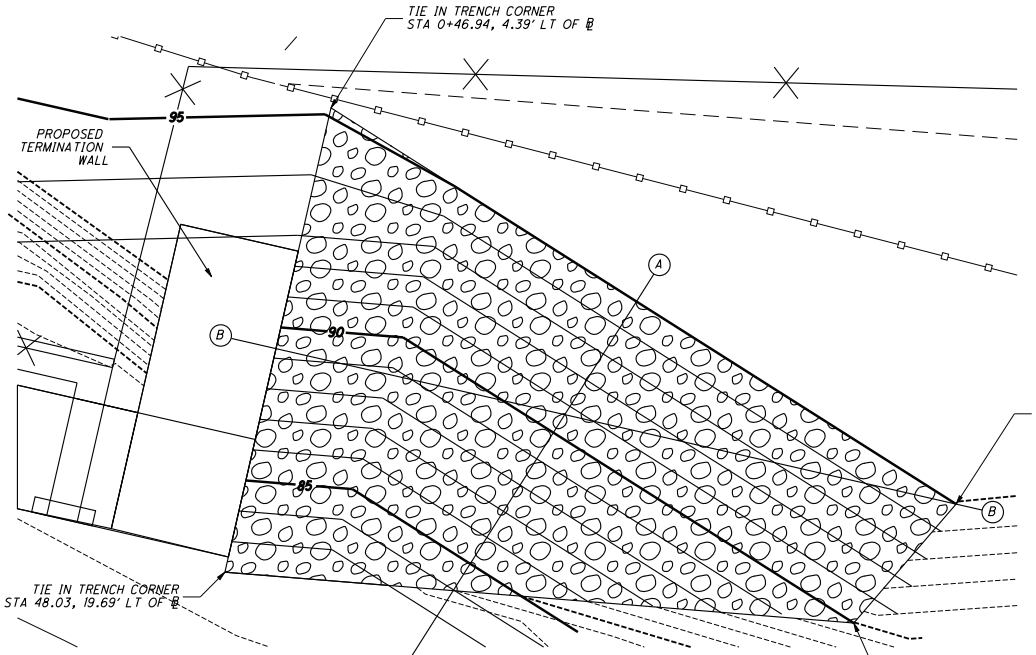

TIE-IN TRENCH PLAN
PLAN
1
7

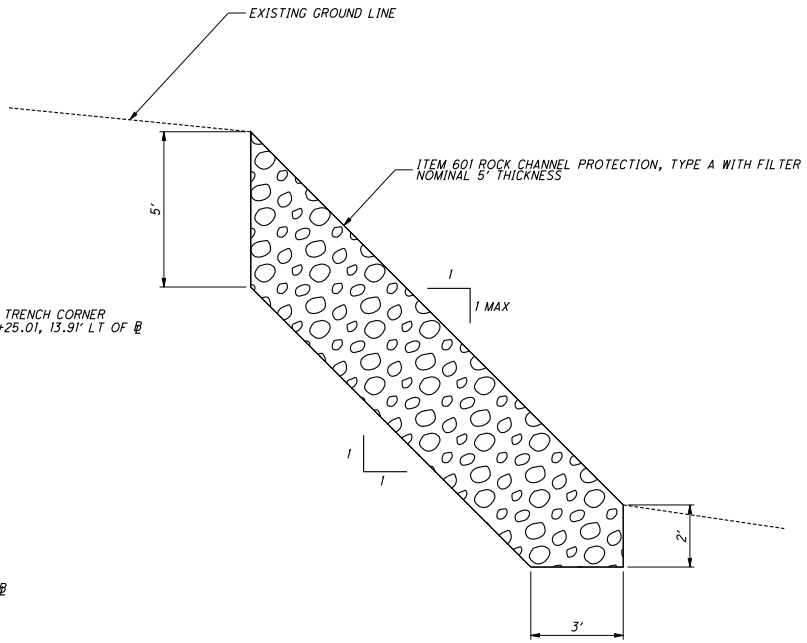

TIE-IN TRENCH SECTION A-A
CROSS SECTION
1
7

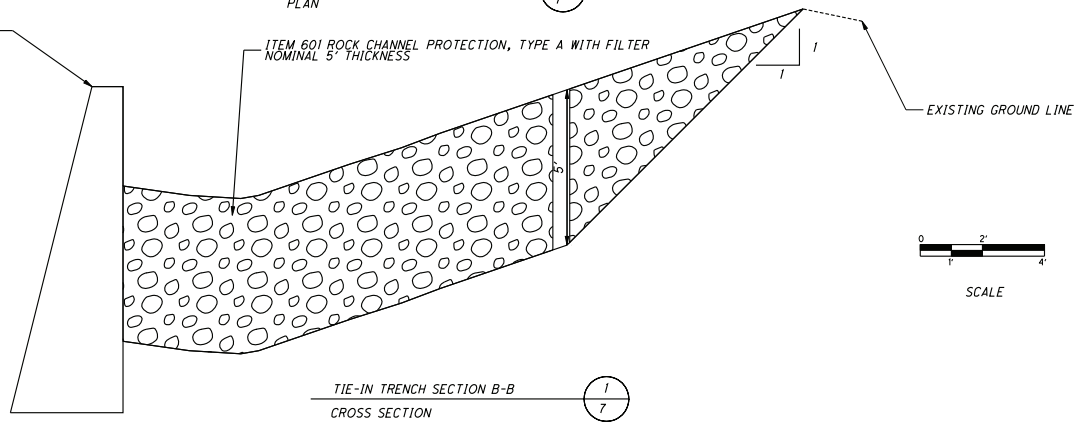

TIE-IN TRENCH SECTION B-B
CROSS SECTION
1
7

SCALE

NOTE:
GRADING PLAN PRESENTED IN PLANS IS BASED ON CONDITIONS AS OF APRIL 2, 2011.

THIS DRAWING IS AND SHALL REMAIN THE PROPERTY OF GANNETT FLEMING ENGINEERS AND ARCHITECTS, P.C. ANY REUSE, REUSE, ALTERATIONS, ADDITIONS, AND/OR DELETIONS OF THESE DRAWINGS ON PROJECT EXTENSIONS OR OTHER PROJECTS SHALL BE AT THE USER'S SOLE RISK AND WITHOUT LIABILITY TO THE EXTENT THAT GANNETT FLEMING ENGINEERS AND ARCHITECTS, P.C. OR ANY OF ITS CONSULTANTS MAY BE LIABLE. IN THE EVENT THERE IS A CONFLICT ARISES BETWEEN THE SEALED DRAWINGS AND THE ELECTRONIC FILES, THE SEALED DRAWINGS WILL GOVERN.

© GANNETT FLEMING ENGINEERS AND ARCHITECTS, PC

5/4/2011 11:17:07 AM
C:\DOCUMENTS AND SETTINGS\MONACO\DESKTOP\METRO PARKS\053136 - LAKE METROPARKS CHAGRIN RIVER PARK-AKRON\C. PRJ WRK\A. CADD\WALLDETAILS3.DGN

DESCRIPTION	DATE	BY
REVISIONS		

DESIGNED	CADD	SCALE
TLM	TLM	AS SHOWN
CHECKED	APPROVED	APPROVED
MWW	MWW	XXX

Gannett Fleming
AKRON, OHIO

CHAGRIN RIVER PARK
STREAM BANK STABILIZATION

TIE IN TRENCH 1
DETAILS

JOB No. 053136
DATE 4-28-11
SHEET No. 7

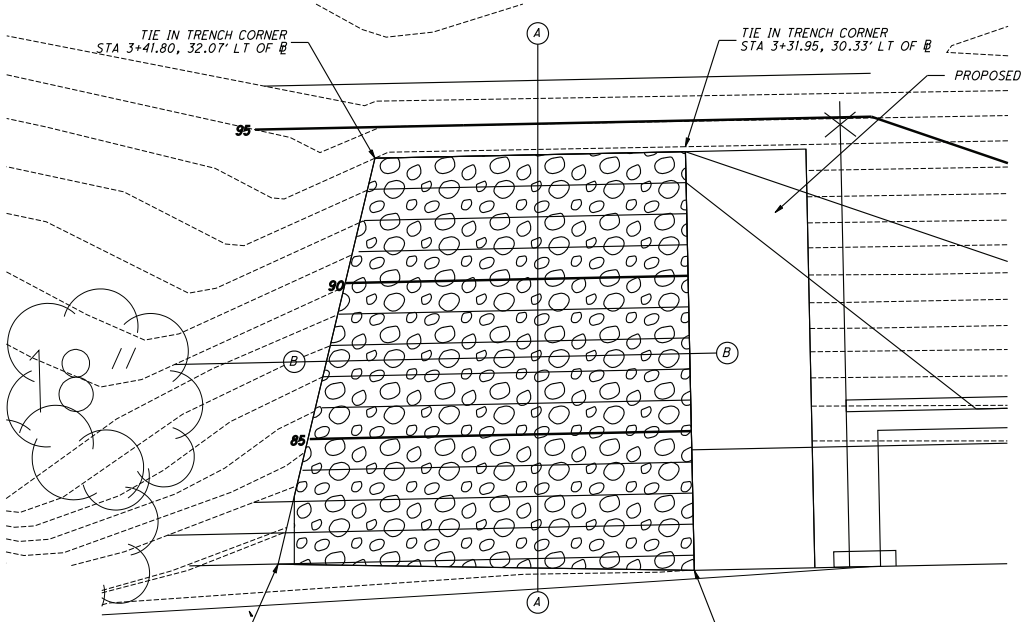

TIE-IN TRENCH PLAN — 1/8
PLAN

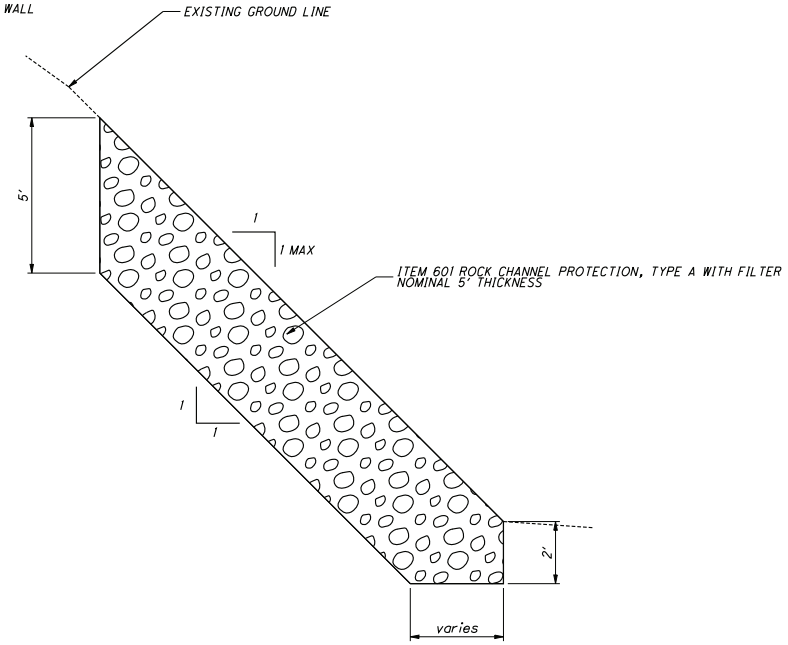

TIE-IN TRENCH SECTION A-A — 1/8
CROSS SECTION

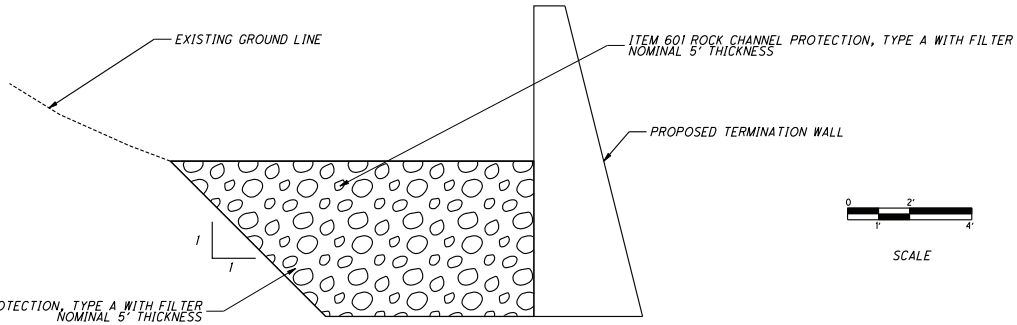

TIE-IN TRENCH SECTION B-B — 1/8
CROSS SECTION

SCALE

NOTE;
GRADING PLAN PRESENTED IN PLANS IS BASED ON CONDITIONS AS OF APRIL 2, 2011.

THIS DRAWING IS AND SHALL REMAIN THE PROPERTY OF GANNETT FLEMING ENGINEERS AND ARCHITECTS, P.C. ANY REUSE, REUSE, ALTERATIONS, ADDITIONS, AND/OR DELETIONS OF THESE DRAWINGS ON PROJECT EXTENSIONS OR OTHER PROJECTS SHALL BE AT THE USER'S SOLE RISK AND WITHOUT LIABILITY TO THE EVENT THAT A CONFLICT ARISES BETWEEN THE SEALED DRAWINGS AND THE ELECTRONIC FILES, THE SEALED DRAWINGS WILL GOVERN.

© GANNETT FLEMING ENGINEERS AND ARCHITECTS, PC

DESCRIPTION	DATE	BY
REVISIONS		

DESIGNED	CADD	SCALE
TLM	TLM	AS SHOWN
CHECKED	APPROVED	APPROVED
MWW	MWW	XXX

Gannett Fleming
AKRON, OHIO

CHAGRIN RIVER PARK
STREAM BANK STABILIZATION

TIE IN TRENCH 2
DETAILS

JOB No. 053136
DATE 4-28-11
SHEET No. 8

5/4/2011 11:16:48 AM
C:\DOCUMENTS AND SETTINGS\MONACO\DESKTOP\METRO PARKS\053136 - LAKE METROPARKS CHAGRIN RIVER PARK AKRON\VL CADD\WALLDETAILS3.DGN

SEEDING END WIDTH	SEEDING SQ. YDS.
	60
7.1	
	6
1.0	
	2
0	
	68

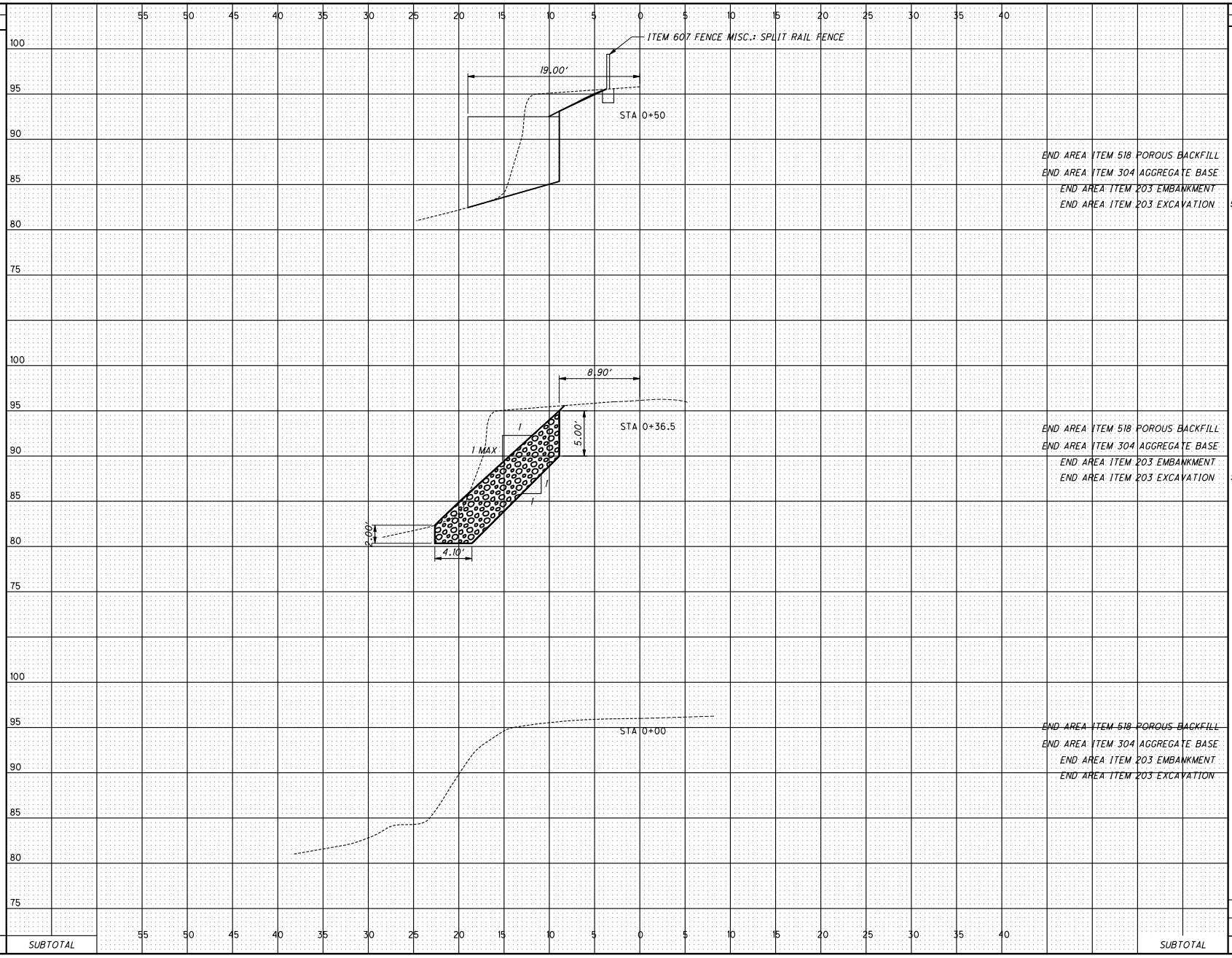

	END AREA CUT	END AREA FILL	VOLUME CUT	VOLUME FILL
ITEM 518				23
ITEM 304				37
ITEM 203			49	24
END AREA ITEM 518 POROUS BACKFILL		0		
END AREA ITEM 304 AGGREGATE BASE		0		
END AREA ITEM 203 EMBANKMENT		0		
END AREA ITEM 203 EXCAVATION	52.5			
ITEM 518				0
ITEM 304				0
ITEM 203			38	0
END AREA ITEM 518 POROUS BACKFILL		0		
END AREA ITEM 304 AGGREGATE BASE		0		
END AREA ITEM 203 EMBANKMENT		0		
END AREA ITEM 203 EXCAVATION	99.8			
ITEM 518				0
ITEM 304				0
ITEM 203			67	0
END AREA ITEM 518 POROUS BACKFILL		0		
END AREA ITEM 304 AGGREGATE BASE		0		
END AREA ITEM 203 EMBANKMENT		0		
END AREA ITEM 203 EXCAVATION	0			
ITEM 518				23
ITEM 304				37
ITEM 203			154	24

SUBTOTAL

CALCULATED TLM
CHECKED MMW

CROSS SECTIONS
STA 0+00 TO STA 0+50

CHAGRIN RIVER PARK

SHEET NO. 9

5/4/2011 11:23:42 AM
C:\DOCUMENTS AND SETTINGS\TMONACO\DESKTOP\METRO PARKS\053136 - LAKE METROPARKS-CHAGRIN RIVER PARK-AKRON\E. PRJ WRK\A. CADD\06-09_53136CROSS SECTIONS.DGN

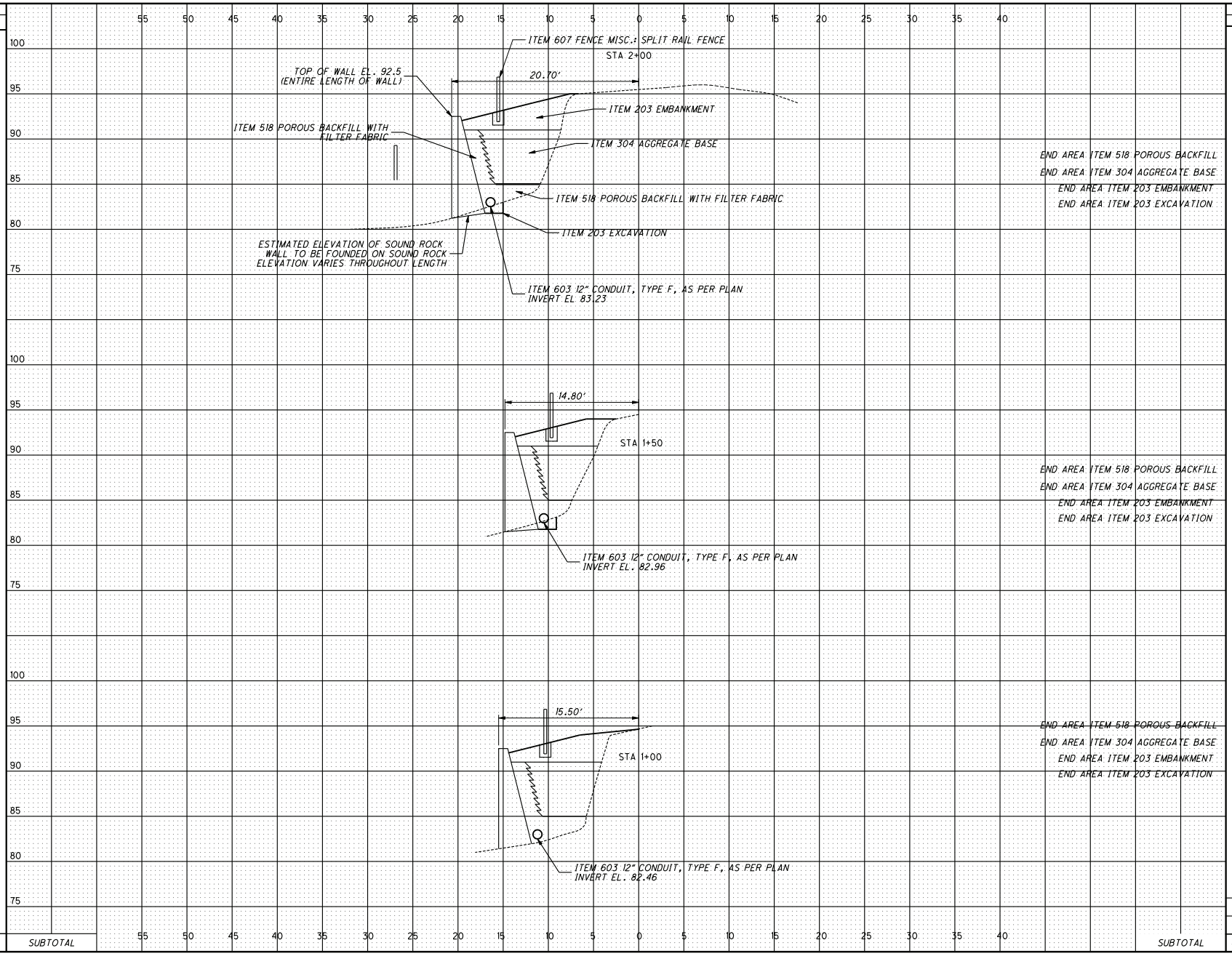

SEEDING END WIDTH	SEEDING SQ. YDS.		END AREA CUT	END AREA FILL	VOLUME CUT	VOLUME FILL
			ITEM 518			18
	38		ITEM 304			35
			ITEM 203		3	27
13.2		END AREA ITEM 518 POROUS BACKFILL		23.5		
		END AREA ITEM 304 AGGREGATE BASE		42.8		
		END AREA ITEM 203 EMBANKMENT		28.0		
		END AREA ITEM 203 EXCAVATION	2.8			
			ITEM 518			41
	68		ITEM 304			68
			ITEM 203		6	46
11.4		END AREA ITEM 518 POROUS BACKFILL		20.3		
		END AREA ITEM 304 AGGREGATE BASE		30.1		
		END AREA ITEM 203 EMBANKMENT		21.6		
		END AREA ITEM 203 EXCAVATION	3.4			
			ITEM 518			42
			ITEM 304			65
			ITEM 203		3	44
	72	END AREA ITEM 518 POROUS BACKFILL		24.9		
		END AREA ITEM 304 AGGREGATE BASE		40.0		
		END AREA ITEM 203 EMBANKMENT		25.4		
14.5		END AREA ITEM 203 EXCAVATION	0			
			ITEM 518			101
			ITEM 304			168
	178	SUBTOTAL	ITEM 203		12	117

CALCULATED TLM
CHECKED MMW

CROSS SECTIONS
STA 1+00 TO STA 2+00

CHAGRIN RIVER PARK

SHEET NO. 10

5/4/2011 11:24:35 AM
C:\DOCUMENTS AND SETTINGS\TMONACO\DESKTOP\METRO PARKS\053136 - LAKE METROPARKS-CHAGRIN RIVER PARK-AKRON\E. PRJ WRK\A. CADD\06-09_53136CROSS SECTIONS.DGN

SEEDING END WIDTH	SEEDING SQ. YDS.
14.3	33
9.5	66
14.5	33
	132

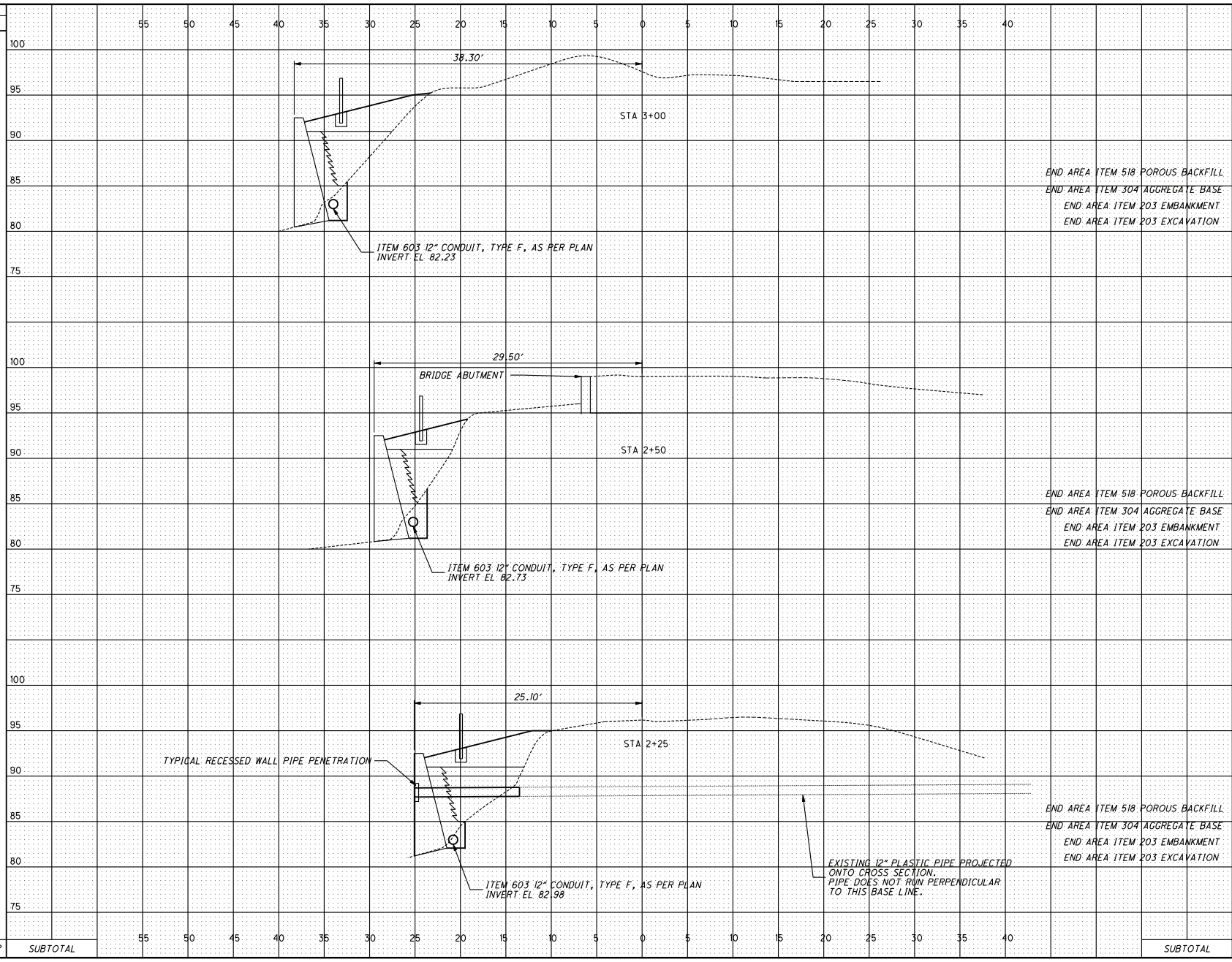

END AREA		VOLUME	
CUT	FILL	CUT	FILL
ITEM 518			11
ITEM 304			14
ITEM 203		33	17
END AREA ITEM 518 POROUS BACKFILL	20.0		
END AREA ITEM 304 AGGREGATE BASE	25.3		
END AREA ITEM 203 EMBANKMENT	28.4		
END AREA ITEM 203 EXCAVATION	9.1		
ITEM 518			37
ITEM 304			40
ITEM 203		19	42
END AREA ITEM 518 POROUS BACKFILL	20.0		
END AREA ITEM 304 AGGREGATE BASE	18.1		
END AREA ITEM 203 EMBANKMENT	16.8		
END AREA ITEM 203 EXCAVATION	11.0		
ITEM 518			17
ITEM 304			24
ITEM 203		7	22
END AREA ITEM 518 POROUS BACKFILL	16.4		
END AREA ITEM 304 AGGREGATE BASE	33.1		
END AREA ITEM 203 EMBANKMENT	30.4		
END AREA ITEM 203 EXCAVATION	3.6		
ITEM 518			65
ITEM 304			78
ITEM 203		59	81

CALCULATED TLM
CHECKED MWW

CROSS SECTIONS
STA 2+50 TO STA 3+37.5

CHAGRIN RIVER PARK

SHEET NO. 11

8/4/2011 11:25:42 AM
C:\DOCUMENTS AND SETTINGS\MBANECK\DESKTOP\METRO PARKS\DGN\36 - LAKE METROPARKS-CHAGRIN RIVER PARK AKRON\ - PR\ AKRON\ CHAGRIN RIVER PARK AKRON\ - CHAGRIN RIVER SECTIONS.DGN

SEEDING END WIDTH	SEEDING SQ. YDS.
0	
	33
0	
	37
5.9	
	381

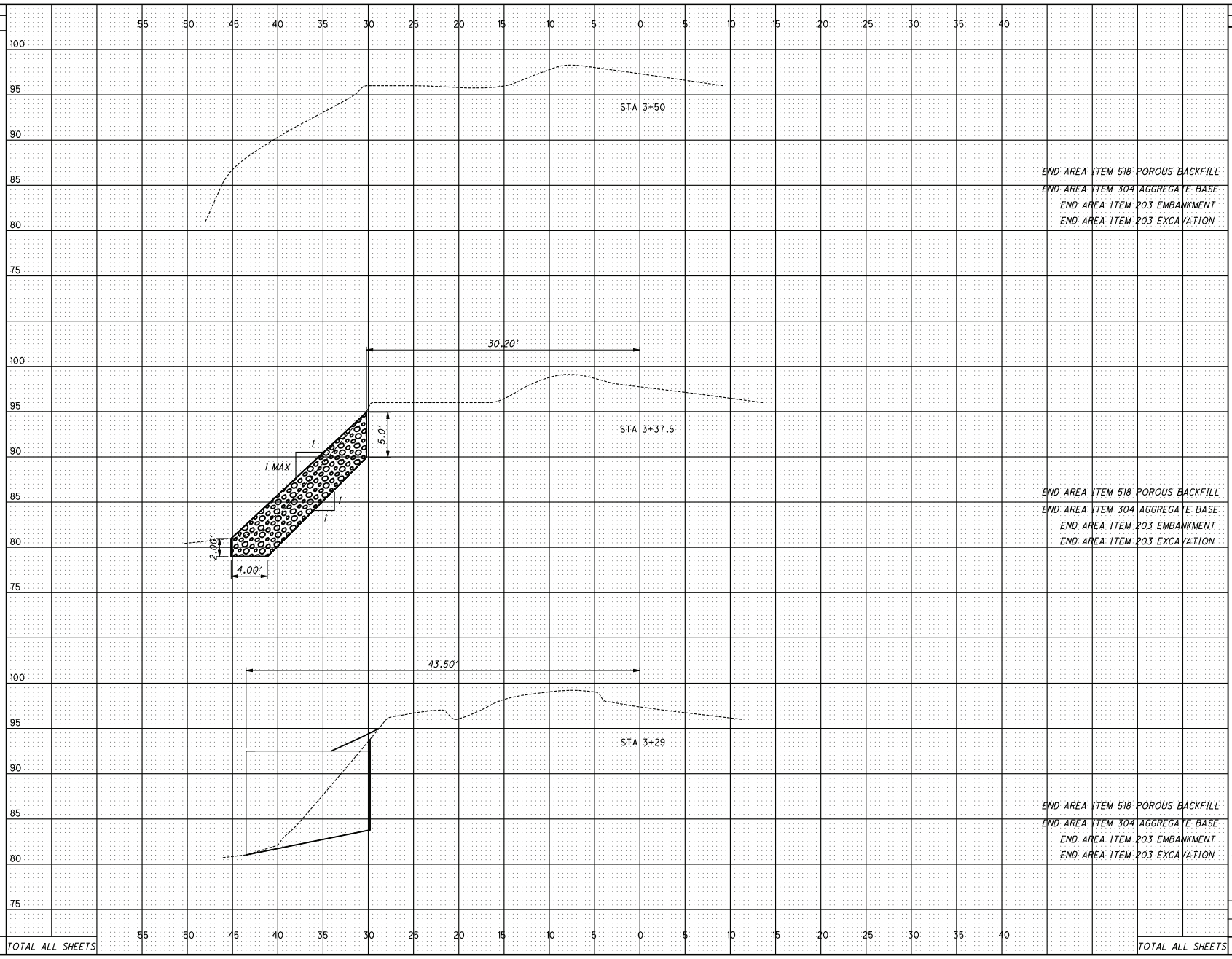

	END AREA CUT	END AREA FILL	VOLUME CUT	VOLUME FILL
END AREA ITEM 518 POROUS BACKFILL		0		
END AREA ITEM 304 AGGREGATE BASE		0		
END AREA ITEM 203 EMBANKMENT		0		
END AREA ITEM 203 EXCAVATION	0			
ITEM 518				0
ITEM 304				0
ITEM 203			13	0
END AREA ITEM 518 POROUS BACKFILL		0		
END AREA ITEM 304 AGGREGATE BASE		0		
END AREA ITEM 203 EMBANKMENT		0		
END AREA ITEM 203 EXCAVATION	54.9			
ITEM 518				0
ITEM 304				0
ITEM 203			17	1
END AREA ITEM 518 POROUS BACKFILL		0		
END AREA ITEM 304 AGGREGATE BASE		0		
END AREA ITEM 203 EMBANKMENT		4.5		
END AREA ITEM 203 EXCAVATION	51.7			
TOTAL ALL SHEETS ITEM 518				189
TOTAL ALL SHEETS ITEM 304				283
TOTAL ALL SHEETS ITEM 203			255	223

CALCULATED TLM
CHECKED MWW

CROSS SECTIONS
STA 3+29 TO STA 3+50

CHAGRIN RIVER PARK

SHEET NO. 12

8/4/2011 11:28:18 AM
C:\USERS\MSMACCO\DESKTOP\METRO PARKS\MB31 36 : LAKE METROPARKS-CHAGRIN RIVER PARK AKRONS: PR1 AKRON.DWG: CHRG-BR BR-931 36CROSS SECTIONS.DGN

NOTES:
1) ALL WOOD FOR SPLIT RAIL FENCE TO BE PRESSURE TREATED.
2) END POST SHALL BE TERMINAL POST.

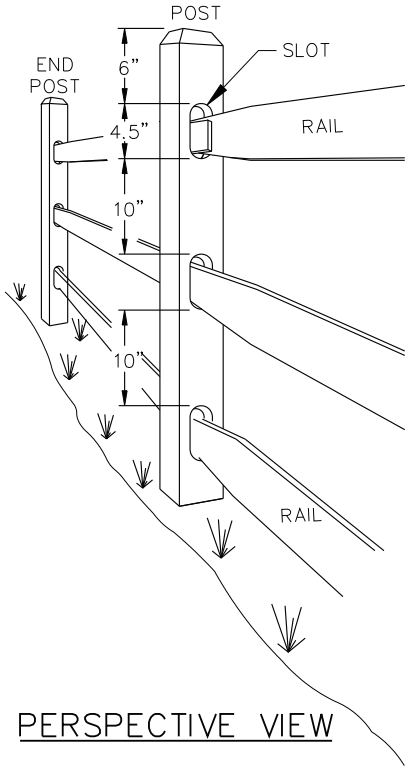

PERSPECTIVE VIEW

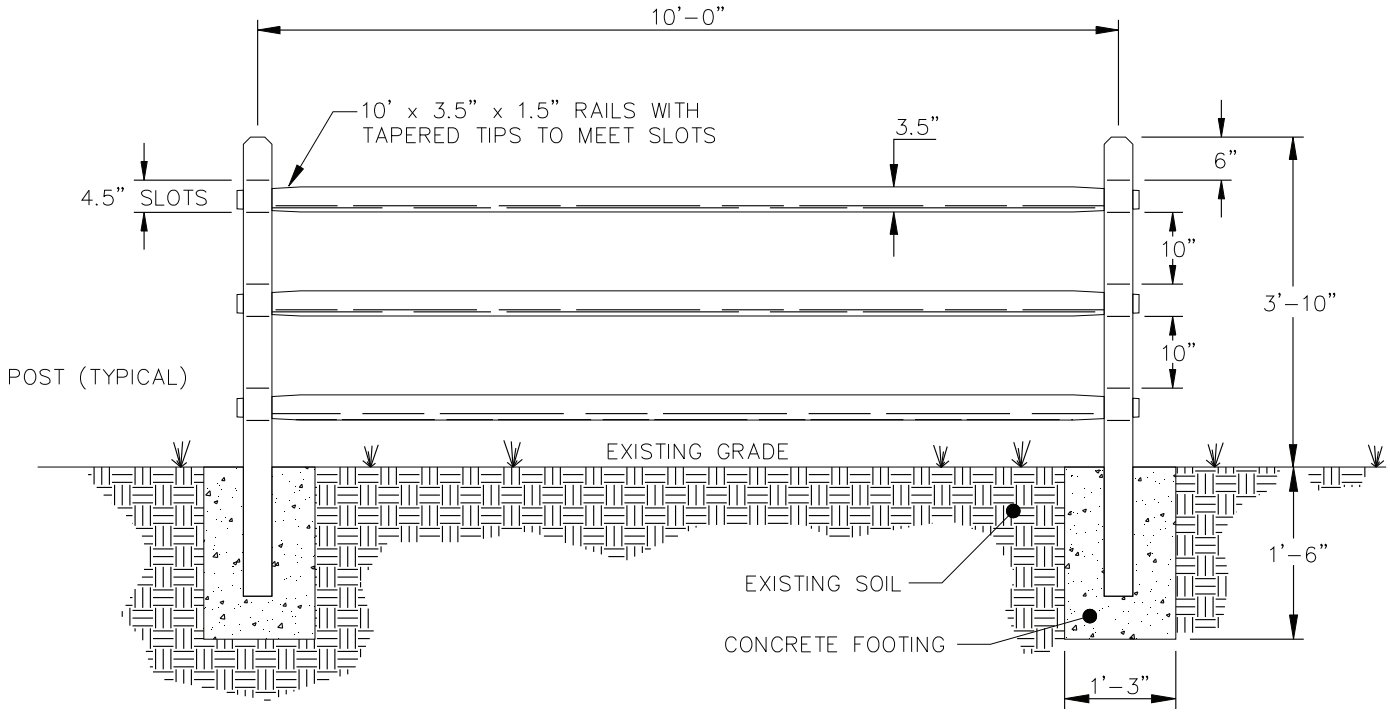

FRONT VIEW

THIS DRAWING IS AND SHALL REMAIN THE PROPERTY OF GANNETT FLEMING ENGINEERS AND ARCHITECTS, P.C. ANY REUSE, REUSE, ALTERATIONS, ADDITIONS, AND/OR DELETIONS OF THESE DRAWINGS ON PROJECT EXTENSIONS OR OTHER PROJECTS SHALL BE AT THE USER'S SOLE RISK AND WITHOUT LIABILITY TO THE GANNETT FLEMING ENGINEERS AND ARCHITECTS. IN THE EVENT THAT A CONFLICT ARISES BETWEEN THE SEALED DRAWINGS AND THE ELECTRONIC FILES, THE SEALED DRAWINGS WILL GOVERN.

© GANNETT FLEMING ENGINEERS AND ARCHITECTS, PC

DESCRIPTION	DATE	BY
REVISIONS		

DESIGNED	CADD	SCALE
TLM	TLM	AS SHOWN
CHECKED	APPROVED	APPROVED
MWW	MWW	XXX

Gannett Fleming
AKRON, OHIO

CHAGRIN RIVER PARK
STREAM BANK STABILIZATION

FENCE DETAILS

JOB No. 053136
DATE 4-27-11
SHEET No. 13

5/4/2011 10:53:16 AM
C:\DOCUMENTS AND SETTINGS\MWWACD\DESKTOP\METRO PARKS\053136 - LAKE METROPARKS CHAGRIN RIVER PARK AKRON\E. PRJ WRK\A. CADD\04 08 WALL DETAILS.DGN

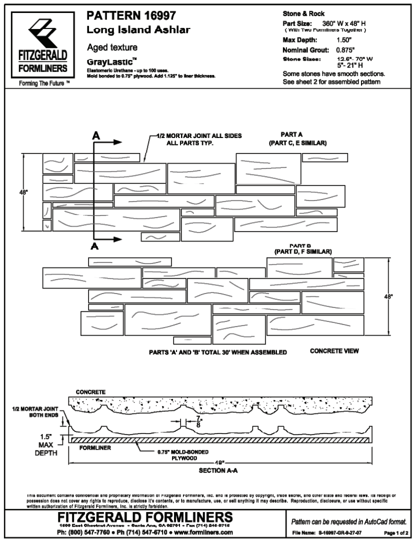

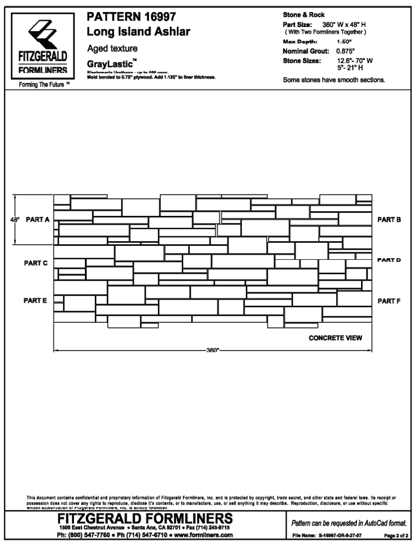

ITEM 530 SPECIAL- FORM LINER

THIS ITEM INCLUDES ALL LABOR AND MATERIALS NECESSARY FOR THE INSTALLATION AND CONSTRUCTION OF THE ARCHITECTURAL CONCRETE FORM LINER.

PART 1 GENERAL

1.1 REFERENCES

A. American Concrete Institute (ACI): ACI 117 - Tolerances for Concrete Construction and Materials.

B. ASTM International (ASTM):
1. ASTM C 1088 - Standard Specification for Thin Veneer Brick Units Made From Clay or Shale; TBX Select.
2. ASTM D 256
3. ASTM D 624 - Standard Test Method for Tear Strength of Conventional Vulcanized Rubber and Thermoplastic Elastomers.
4. ASTM D 638 - Standard Test Method for Tensile Properties of Plastics.
5. ASTM D 648 - Standard Test Method for Deflection Temperature of Plastics Under Flexural Load in the Edgewise Position.
6. ASTM D 695 - Standard Test Method for Compressive Properties of Rigid Plastics.
7. ASTM D 785 - Standard Test Method for Rockwell Hardness of Plastics and Electrical Insulating Materials.
8. ASTM D 790 - Standard Test Methods for Flexural Properties of Unreinforced and Reinforced Plastics and Electrical Insulating Materials.
9. ASTM D 792 - Standard Test Methods for Density and Specific Gravity (Relative Density) of Plastics by Displacement.
10. ASTM D 1525 - Standard Test Method for Vicat Softening Temperature of Plastics.
11. ASTM D 2240 - Standard Test Method for Rubber Property Durometer Hardness, Shore A; A Scale Test.

1.2 SUBMITTALS

A. Product Data: Manufacturer's data sheets on each product to be used, including:
1. Printed product data and installation guidelines for form liner system.
2. Manufacturer's installation instructions, showing required preparation and installation procedures.
3. Storage and handling requirements and recommendations.
4. Installation methods.
5. Cleaning and maintenance instructions.

B. Shop Drawings: Submit formwork panel elevations, detailing the location of Architectural concrete work, including but not limited to the following:
1. Form tie locations, end locations and other special conditions, panel sizes, joint locations, joint widths, reveal and false-joint locations and dimensions, elevations, sections and details of assembly components, attachment details, and weather sealing; indicate locations, configurations, typical details, connections, expansion joints, large scale plans.
2. Show sequence of installation.
3. Show location of members, other items of work and related work of other Sections to be coordinated with work of this section.
4. Submit detail drawings depicting proper installation and flashing techniques.
Coordinate locations with those found on the Contract Drawings.

C. Quality Assurance Submittals: Copies of test reports by independent laboratories verifying the performance of the system shall be submitted to the Owner upon request.

D. Verification Samples: For each finish product specified, two samples, minimum size 12 inches (305 mm) by 12 inches (305 mm), maximum size 24 inches (610 mm) by 24 inches (610 mm), representing actual products, styles, colors, patterns, and textures.
1. Form liner samples of each type of form liner specified.
2. Bond breaker sample on brick chip representing bond breaker specified
3. Form release sample representing form release specified.

E. Warranty: Copy of manufacturer's standard warranty.

1.3 QUALITY ASSURANCE

A. Single Source Requirements: Provide primary and secondary components required for installation of form liner systems shall be components of system recommended by single source.

B. Manufacturer Qualifications: Minimum 5 years experience manufacturing similar products.

C. Installer Qualifications:
1. Experienced and competent in Architectural concrete installation.
2. If requested, submit a list of recently completed projects using similar materials.

D. Mock-Up: Provide a mock-up for evaluation of surface preparation techniques and application workmanship.
1. The mock-up shall demonstrate the full range of specified design options and Workmanship to be expected in completed work.
2. Locate mock-up on site in location as directed by Owner. Clean the sample panel installation using the same materials and tools as planned for the final construction.
3. Obtain Owner's acceptance of mock-up before start of work.
4. Do not proceed with remaining work until workmanship, colors, styles, patterns, and textures are approved by Owner.
5. Incorporate edge, reveal, and detail as per drawings.
6. Show clean, pressure washed concrete surface.
7. Modify mock-up area as required to produce acceptable work.
8. Maintain Mock Up for comparison with finished work.
9. Remove mock-up at the completion of the work.

E. Conduct a pre-installation meeting to verify all products, application procedures, site conditions and warranty terms.

1.4 DELIVERY, STORAGE, AND HANDLING

A. Materials shall be delivered to the location in unopened factory containers. Upon arrival, materials shall be inspected for damage and manufacturer informed of any discrepancies.
Deficient materials shall not be used.

B. Materials shall be stored in a protected location and safeguarded from damage.

C. Store form liners covered and elevated off the exposed ground. Prolonged high or low temperatures will cause a permanent distortion and deterioration of physical properties.

D. Protect liquid materials from freezing temperatures and temperatures in excess of 90 degrees F (32 degrees C). Store covered, out of direct sunlight.

PART 2 PRODUCTS

2.1 MANUFACTURERS

A. Acceptable Manufacturer: Fitzgerald Formliners, which is located at: 1500 E. Chestnut Ave. ; Santa Ana, CA 92701; Toll Free Tel: 800-547-7760; Tel: 714-547-6710; Email: request info (info@form liners.com); Web: www.form liners.com

2.2 FORM LINERS

A. GrayLastic Extended-Use Elastomeric Form liners: As manufactured by Fitzgerald Formliners.
1. Description: 100 percent pure urethane, mold bonded to 0.75 inch (19 mm) ACX plywood, up to 100 concrete pours.
2. Compliance:
   a. Shore A Hardness ASTM D 2240: 60-70.
   b. Cast Density: PCF 62-67.
   c. Tear Strength, ASTM D 624: PLI 140-160.
   d. Tensile Strength, ASTM D 638 (ASTM D 412): 1300-1600 psi.
   e. Ultimate Elongation, ASTM D 638 (ASTM D 412): 280 330 percent.
3. Hardware: T-nuts are available if needed for attaching form liners to steel forms.
4. Manufacturing Tolerances.
   a. Mold Bonded to 0.75 inch (19 mm) Plywood: ± 0.125 inches (3.2 mm), length and width).
   b. Unbonded: shrinkage rate of +/- 1 inch (25 mm), length and width.
5. Style: Model: 16997 Long Island Ashlar

PART 3 EXECUTION

3.1 EXAMINATION

A. Do not begin installation until substrates are within manufacturer's specified tolerances and have been prepared in accordance with manufacturer's instructions.

B. If substrate preparation is the responsibility of another installer, do not proceed with installation. Notify Owner of unsatisfactory preparation immediately. Commencement of full installation represents acceptance of existing substrate conditions.

3.2 INSTALLATION

A. Install in accordance with manufacturer's written instructions as applicable to each type of substrate required. Install in accordance with specified pattern and mortar.

B. Tolerances: Dimensions of the finished panel, at the time of erection in the structure, shall conform to the tolerances for precast, non pre-stressed elements in ACI 117, unless otherwise specified by the Owner.

3.3 CLEANING AND PROTECTION

A. Cleaning: As recommended by manufacturer. Do not begin cleaning until mortar joints are properly cured. Allow a minimum of 24 to 72 hours. Soak mortar joints before applying cleaner.
1. Thoroughly flush wall and are after cleaning.
2. Clean adjacent materials and surfaces of all foreign materials resulting from the work of this Section.

B. Protection:
1. Protect installed materials from water impinging on the visible surface, chinking, sealants joints, and from behind.
2. Protect installed materials from dust, dirt, precipitation, freezing, damaged, spilled materials, and continuous high humidity until they are fully dry.

METHOD OF MEASUREMENT

THIS ITEM SHALL BE MEASURED PER SQUARE FOOT.

PAYMENT

THIS ITEM WILL BE PAID FOR AT THE CONTRACT UNIT PRICE ANS SHALL INCLUDE ALL LABOR, EQUIPMENT, AND MATERIALS NECESSARY TO COMPLETE THE WORK. THE BASIS OF PAYMENT WILL BE AS FOLLOWS

ITEM	DESCRIPTION	UNIT
SPEC	SPECIAL – FORM LINER	SQ FT

THIS DRAWING IS AND SHALL REMAIN THE PROPERTY OF GANNETT FLEMING ENGINEERS AND ARCHITECTS, P.C. ANY MISUSE, REUSE, ALTERATIONS, ADDITIONS, AND/OR DELETIONS OF THESE DRAWINGS ON PROJECT EXTENSIONS OR OTHER PROJECTS SHALL BE AT THE USER'S SOLE RISK AND WITHOUT LIABILITY TO GANNETT FLEMING ENGINEERS AND ARCHITECTS, P.C. IN THE EVENT THAT A CONFLICT ARISES BETWEEN THE SEALED DRAWINGS AND THE ELECTRONIC FILES, THE SEALED DRAWINGS WILL GOVERN.

© GANNETT FLEMING ENGINEERS AND ARCHITECTS, PC

DESCRIPTION	DATE	BY
REVISIONS		

DESIGNED	CADD	SCALE
TLM	TLM	AS SHOWN
CHECKED	APPROVED	APPROVED
MWW	MWW	XXX

Gannett Fleming
AKRON, OHIO

CHAGRIN RIVER PARK
STREAM BANK STABILIZATION

FORM LINER DETAILS

JOB No. 053136
DATE 5-9-11
SHEET No. 14

WATER-BASED REACTIVE STAINED CONCRETE FLOOR

PART 1 – GENERAL

1.1 SUMMARY

A. Drawings and general provisions of Contract, including General and Supplementary Conditions and Division 1 Specification sections, apply to Work of this Section.

B. Section Includes:
1. Water-based Reactive stained concrete floor finish.
2. Sealer.

C. Related Sections:
1. Division 3 Section "Cast-In-Place" for general applications of concrete.
2. Division 7 Section "Joint Sealants" for colored sealant for joints.

1.2 SUBMITTALS

A. Product Data: Manufacturer's technical data sheets and installation instructions for each product specified.

B. Samples for Initial Selection or Custom Color Samples Provided by Manufacturer per Specifier's Requirements: Manufacturer's color charts showing full range of colors available.

1.3 QUALITY ASSURANCE

A. Manufacturer Qualifications: Manufacturer of stain and sealer products shall have minimum 10 years experience in the production of chemical stains.

B. Installer Qualifications: Minimum 3 years experience in staining applications and successfully completed not less than 6 projects comparable in scale and complexity.

C. Substitutions: The use of any products other than those specified shall be considered providing that the Owners requests its use in writing within 14 days prior to bid date. This request shall be accompanied by:
1. A certificate of compliance from the material manufacturer stating that the proposed products meet or exceed the requirements specified.
2. Documented proof that the proposed material has a 10 year proven record of performance for staining concrete substrates, confirmed by at least 5 local projects that the Owner can examine.

D. Regulatory Requirements:
1. Products shall comply with the United States Clean Air Act for maximum Volatile Organic Compound (VOC) content as specified in PART 2 of this section.

E. Source Limitations: Obtain each specified material from same source and maintain high degree of consistency in workmanship throughout Project.

1.4 DELIVERY, STORAGE AND HANDLING

A. Deliver the specified products in original, unopened containers with legible manufacturer's identification and information.

B. Store specified products in conditions recommended by the manufacturer.

1.5 PROJECT CONDITIONS

A. Environmental Conditions: Maintain an ambient temperature of between 50° and 90°F during application and at least 48 hours after application.

B. Protection: Precautions shall be taken to avoid damage or contamination of any surfaces near the work zone. Protect completed stain work from moisture or contamination.

1.6 PRE-JOB CONFERENCE

A. One week prior to the placement of Water-based Reactive Stain a meeting will be held to discuss the project and application of materials.

PART 2 – PRODUCTS

2.1 ACCEPTABLE MANUFACTURERS

A. Manufacturer: L.M. SCOFIELD COMPANY, Douglasville, Georgia and Los Angeles, California (800) 800-9900 or the appropriate local contact: Eastern Division – 201-672-9050; Western Division – 714-568-1870; Central Division Office – 630-377-5959.

2.2 MATERIALS

A. Water-based Reactive Stains: LITHOCHROME® Tintura™ Stain; L.M. SCOFIELD COMPANY, a ready-to-use, penetrating, reactive staining product that chemically bonds with cured concrete or cementitious toppings to produce translucent color effects.
1. Colors: As selected by Owner

B. Sealers:
1. SCOFIELD® Selectseal-W™; L.M. SCOFIELD COMPANY, a premium-quality, one-component, clear, acrylic-polyurethane sealer resistant to staining, abrasion and ultraviolet (UV) radiation designed to protect concrete hardscapes, floors, cementitious toppings, and vertical concrete.
2. SCOFIELD® Selectseal-S™ or SCOFIELD® Cureseal-S™ may be considered when humid or low temperature conditions exist and the use of waterborne SCOFIELD® Selectseal-W™ is not practical.

C. Sealants: LITHOSEAL™ Trafficalk 3G™; L.M. SCOFIELD COMPANY.
1. Colors: As selected Owner.

PART 3 – EXECUTION

3.1 EXAMINATION

A. Verification of Conditions: Owner shall examine areas and conditions under which work will be performed and identify conditions detrimental to proper and timely completion of work. Do not proceed until unsatisfactory conditions have been corrected.

3.2 PREPARATION

A. New Concrete:
1. Newly placed concrete shall be sufficiently cured to allow concrete to become reactive, minimum 28 days.
2. Do not use liquid curing materials. Cure concrete flatwork with new, unwrinkled, non-staining, high quality curing paper. Do not overlap curing paper.
3. Surfaces shall be cured using the same method and different sections (pours) chemically stained when the concrete is the same age.
4. Immediately prior to chemically staining, thoroughly clean the concrete. Sweep surfaces, the pressure wash or scrub using a rotary floor machine. Use suitable, high-quality commercial detergents to facilitate cleaning. Rinse surfaces after cleaning until rinse water is completely clean. Allow floor to dry completely prior to application of floor stain.
5. Concrete surfaces must be uniformly slip-resistant and profiled to meet a Concrete Surface Preparation (CSP) profile of 1-2 per ICRI guidelines.
6. Some concrete may require abrading to open the surface and make it sufficiently penetrable. In these instances the concrete surface must be sanded using an 60-80 mesh-sanding screen or a grit brush. After sanding, all residue must be removed by power vacuuming. The surface should then be pressure washed or scrubbed using a rotary floor machine.
7. For preparation, the sandblaster should be capable of producing a light, uniform sandblast and be equipped with a dust collector.
8. For preparation, the pressure washer should be equipped with a fan tip and have a minimum pressure capability of 4000 psi (14 MPa). Hot water capability may facilitate cleaning of existing concrete.
9. Acid washing may be required when the above surface preparation does not yield adequate penetration or if there are excessive alkali deposits or surface discoloration. The reacted residue must be abraded using a low-speed floor machine equipped with a 60 mesh screen or a grit brush and then thoroughly rinsed until the rinse water is clear and free of solids, a minimum of two times. After rinsing, neutralize any remaining acid residue by washing with a solution of baking soda (sodium bicarbonate) and water. (Test pH of floor should be 7 or higher.)

B. Existing Concrete:
1. Clean concrete surfaces so that surfaces are completely penetrable before receiving the initial application of chemical stain. Test surfaces to receive stain by spotting with water. Water should immediately darken the substrate and be readily absorbed. If water beads and does not penetrate or only penetrates in some areas, additional surface preparation and testing shall be performed.
2. Cleaning method used depends on the condition of the concrete surface. To remove dirt and other contaminates, detergents and other commercial grade cleaners should be considered and tested.
3. Rinse concrete substrates until rinse water is completely clean.
4. For preparation of interior floors, the rotary floor machine should be heavy duty and operate at approximately 175 rpm. With a 60-80 mesh-sanding screen or a grit brush, remove all contaminates and weak cement paste from the surface. This will also open the surface to allow the chemical stain to penetrate.
5. Acid washing may also be required. (Refer to New Concrete Preparation.)

C. Scoring: Score decorative jointing in concrete surfaces 1/8-inch (3.2 mm) deep with diamond blades. Rinse until water is completely clean.

3.2 APPLICATION OF WATER-BASED REACTIVE STAIN

A. Concrete surfaces shall be dry and properly prepared as described above. Protect surrounding areas from over-spray, run off and tracking. Divide surfaces into small work sections using wall, joint lines, or other stationary breaks as natural stopping points.

B. Apply water-based reactive stains full strength (undiluted) at the coverage rate recommended by the manufacturer and use application equipment described in the manufacturer's printed technical literature. The color of the liquid chemical stain has no resemblance to the final color produced on the concrete substrate.

C. Apply water-based reactive stain to the substrate with an airless sprayer or HVLP sprayer.

D. Reaction time depends on wind conditions, temperatures, and humidity levels.

E. The second coat, if required, should be applied after the first coat has dried sufficiently and can be walked on without damage, normally 2-4 hours after application depending on temperature and humidity. A third coat could be applied 2-4 hours after the second coat.

F. On vertical surfaces, spray applications of LITHOCHROME® Tintura™ Stain should start at the bottom and proceed upward. The material should be applied in light coats while maintaining a wet edge to ensure penetration into the surface.

3.4 APPLICATION OF SEALER

A. Concrete substrate shall be completely dry.

B. Sealer shall be produced by the water-based reactive stain manufacturer.

C. After the final LITHOCHROME® Tintura™ Stain application has dried sufficiently, normally 8-24 hours at 75° F (24° C) and 50% relative humidity, remove all contaminates from the surface by dry mopping if required.

D. Apply sealer according to manufacturer's written instructions at a rate of 300 to 500 square feet per gallon per coat. Two coats are required.

E. Maintain a wet edge at all times.

F. Allow sealer to completely dry before applying additional coats.

G. Apply second coat of sealer at 90° to the direction of the first coat using the same application method and rates.

H. Seal horizontal joints in areas subject to pedestrian or vehicular traffic.

3.5 PROTECTION

A. Protect floor from traffic for at least 72 hours after final application of sealer.

3.6 MAINTENANCE

A. Maintain water-based reactive stained and sealed floors by sweeping. Clean spills when they occur and rinse dirt off with water. Wet-clean heavily soiled areas by mopping or by scrubbing with a rotary floor machine equipped with a scrubbing brush and a suitable, high-quality commercial detergent. Maintain interior floors that require polishing by using a compatible, premium-grade, emulsion-type, commercial floor polish, following manufacturer's instructions and safety requirements.
1. Information on commercial floor polishes is available by contacting Johnson Diversey, Sturtevant, Wisconsin, 800-558-2332.

3.7 APPLICATORS

A. For a list of contractors, contact the local L. M. Scofield Company Division Office: Eastern Division 201 672 9050; Western Division Office – 714-568-1870; Central Division Office – 630-377-5959.

PAYMENT

THIS ITEM IS INCIDENTAL TO ITEM 530 SPECIAL – FORM LINER, ALL LABOR, AND MATERIAL.

THIS DRAWING IS AND SHALL REMAIN THE PROPERTY OF GANNETT FLEMING ENGINEERS AND ARCHITECTS, P.C. ANY MISUSE, REUSE, ALTERATIONS, ADDITIONS, AND/OR DELETIONS OF THESE DRAWINGS ON PROJECT EXTENSIONS OR OTHER PROJECTS SHALL BE AT THE USER'S SOLE RISK AND WITHOUT LIABILITY TO GANNETT FLEMING ENGINEERS AND ARCHITECTS, P.C. IN THE EVENT THAT A CONFLICT ARISES BETWEEN THE SEALED DRAWINGS AND THE ELECTRONIC FILES, THE SEALED DRAWINGS WILL GOVERN.

© GANNETT FLEMING ENGINEERS AND ARCHITECTS, PC

5/24/2011 11:34:18 AM
G:\053136 - LAKE METROPARKS-CHAGRIN RIVER PARK-AKRON\E. PRJ WRK\A. CADD\04-08&13 WALL DETAILS.DGN

DESCRIPTION	DATE	BY
REVISIONS		

DESIGNED	CADD	SCALE
TLM	TLM	AS SHOWN
CHECKED	APPROVED	APPROVED
MWW	MWW	XXX

Gannett Fleming
AKRON, OHIO

CHAGRIN RIVER PARK
STREAM BANK STABILIZATION

STAIN SPECIFICATIONS

JOB No.	SHEET No.
053136	15
DATE	
5-24-11	

APPENDIX D

USACE Nationwide Permit #13 Approval Letter

DEPARTMENT OF THE ARMY
BUFFALO DISTRICT, CORPS OF ENGINEERS
1776 NIAGARA STREET
BUFFALO, NEW YORK 14207-3199

REPLY TO

February 9, 2012

Regulatory Branch

SUBJECT: Transmittal of **PROVISIONAL** Department of the Army Permit No. 2011-00612, Nationwide Permit No. 13 as Published in the Federal Register, Volume 72, No. 47, on Monday, March 12, 2007

Lake Metroparks
Mr. Stephen Madewell
11211 Spear Road
Concord Twp., Ohio 44077

Dear Mr. Madewell:

I am writing to you in regard to your proposal to install a cast in place concrete gravity wall in the Chagrin River located south of Reeves Road and north of Highway 2, City of Willoughby, Lake County, Ohio (Sheet 1 of 26). The proposed project will result in the discharge of approximately 315 cubic yards of clean fill material permanently filling approximately 318 linear feet (0.06-acre) of streambank below the ordinary highwater mark of the Chagrin River (Sheets 2 to 26 of 26). The purpose of the proposed project is bank stabilization.

I have determined that your project satisfies the terms and conditions of the attached Nationwide Permit. However, your project does not conform with all of the conditions contained in the Section 401 Water Quality Certification (WQC) associated with this Nationwide Permit.

Before you may commence work under this Nationwide Permit you first need to obtain an activity specific WQC from OEPA:

Mr. Tom Harcarik
Section 401 Certification Unit
50 West Town Street, Suite 700
PO Box 1049
Columbus, Ohio 43216-1049

Once you have successfully completed the state process, you must forward a copy of the project specific WQC to this office. The conditions of the project specific WQC will supersede the WQC conditions included with the NWP attached to this transmittal. If the project remains unchanged you may commence work under the attached Nationwide Permit without any further

coordination with this office. However, if your project is modified during the OEPA review you will need to contact this office to determine if the modified project is still authorized by the attached Nationwide Permit. If this situation arises, you may need to furnish a revised permit application, and you may not commence work until you receive Department of the Army authorization.

Verification of the applicability of this Nationwide Permit (NWP) is valid until March 18, 2012 unless the NWP authorization is modified, suspended or revoked prior to this date. This verification will remain valid during this period if the NWP authorization is reissued without modification or your activity complies with any subsequent modification of the NWP authorization. Please note in accordance with 33 CFR 330.6(b) that if you commence or are under contract to commence this activity in reliance of your Permit prior to the date this NWP expires, or is suspended or revoked, or is modified, such that the activity would no longer comply with the terms and conditions of the NWP, you have twelve months from the date of permit modification, expiration, or revocation to complete the activity under the present terms and conditions of this NWP, unless this NWP has been subject to the provisions of discretionary authority.

It is your responsibility to remain informed of changes to the NWP program. A public notice announcing any changes will be issued when they occur and will be available for viewing at our website: http://www.lrb.usace.army.mil. Finally, note that if your activity is not undertaken within the defined period or the project specifications have changed, you must immediately notify this office to determine the need for further approval or reverification.

In addition to the general conditions attached to the Nationwide Permit, your attention is directed to the following Special Conditions which are also appended at the end of the Nationwide Permit General Conditions:

1. That a one-time waiver of the in-water work restriction period of September 15 to June 30 is authorized; this applies only to this project and applies only to September 15, 2011 to June 30, 2012. This one-time waiver expires September 15, 2012. If the in-water work is not completed during this authorized period, and in-water work during the restricted period is necessary, you must request an additional waiver of the in-water work restriction period. This request shall be submitted to the attention of: Melissa Tarasiewicz, U.S. Army Corps of Engineers, 1776 Niagara Street, Buffalo, NY 14207 and must be coordinated with the Ohio Department of Natural Resources- Division of Wildlife. To the greatest extent practicable any in-water work should be avoided between September 15 and June 30 to preclude adverse impacts on the spawning,

nursery, and feeding activities of indigenous fish species.

2. The permittee must obtain, or a waiver of, an Individual Section 404 Water Quality Certification (WQC) from the State of Ohio prior to the use of this Nationwide Permit. Once issued, the WQC is part of this permit pursuant to Section 401(d) of the Clean Water Act. Noncompliance with any limitation or requirements stated in the WQC may be the basis for suspension, revocation or modification of this permit. To obtain the WQC you must contact the Ohio Environmental Protection Agency, Section 401 Certification Unit, PO Box 1049, Columbus, Ohio 43216-1049, or by phone at (614) 644-2872.

3. Soils removal to complete this project does not alleviate the applicant from other rules and standards established under the United States Environmental Protection Agency (USEPA) clean up under 40 CFR 761.61 (c) for proper soil disposal. Contact USEPA to ensure you remain in compliance with USEPA rules and regulations for cleanup if questions arise.

4. The permittee, including their contractors, must ensure any excavated material is not temporarily or permanently placed in Waters of the U.S., including wetlands. The proposed location for disposal of excavated material shall be identified on a map and submitted to the attention of: Melissa Tarasiewicz, U.S. Army Corps of Engineers, 1776 Niagara Street, Buffalo, NY 14207 no later than 15 days after permit issuance or prior to work in a Water of the U.S.

5. You are responsible for ensuring that all contractors and/or workers executing the activity(s) authorized by this permit have knowledge of the terms and conditions of the authorization and that a copy of the permit document is at the project site throughout the period that the authorized work is underway.

6. The permittee is authorized to discharge only clean fill material that is free of fines, oil and grease, debris, wood, general refuse, plaster, broken asphalt, or other potential pollutants.

7. No acid washing is authorized by this permit.

8. The permittee must use watertight or waterproof forms to prevent the spillage or discharge of uncured concrete leachate into Waters of the United States, including

wetlands. The permittee must not allow any fresh concrete, leachate, or washings from concrete equipment and trucks to enter a Water of the United States, including wetlands.

9. The permittee must seed and mulch all exposed banks and slopes to prevent erosion within 24 hours of final grade. The mulch must be maintained until the vegetation becomes re-established.

Finally, this letter contains an approved jurisdictional determination for the subject parcel, valid for a period of 5 years from the date of this correspondence unless new information warrants revision of the determination before the expiration. If you object to this determination, you may request an administrative appeal under Corps regulations at 33 CFR Part 331. Enclosed you will find a Notification of Appeal Process (NAP) fact sheet and Request for Appeal (RFA) form. If you request to appeal the above determination, you must submit a completed RFA form within 60 days of the date on this letter to the Great Lakes/Ohio River Division Office at the following address:

Review Officer
Great Lakes and Ohio River Division
CELRD-PDS-O
550 Main Street, Room 10032
Cincinnati, OH 45202-3222
Phone: 513-684-6212;FAX(513) 684-2460

In order for an RFA to be accepted by the Corps, the Corps must determine that it is complete, that it meets the criteria for appeal under 33 C.F.R. part 331.5, and that it has been received by the Division Office within 60 days of the date of the NAP. Should you decide to submit an RFA form, it must be received at the above address by April 9, 2012.

It is not necessary to submit an RFA to the Division office if you do not object to the determination in this letter.

A copy of this letter has been sent to Mr. Mitchell Weber of Gannett Fleming, Mr. Eric Stechschulte of Lake Metroparks, and Mr. Tom Harcarik of the Ohio Environmental Protection Agency.

Regulatory Branch
SUBJECT: Transmittal of **PROVISIONAL** Department of the Army Permit No. 2011-00612, Nationwide Permit No. 13 as Published in the Federal Register, Volume 72, No. 47, on Monday, March 12, 2007

Questions pertaining to this matter should be directed to me at (716) 879-4159, by writing to the following address: U.S. Army Corps of Engineers, 1776 Niagara Street, Buffalo, New York 14207, or by e-mail at: melissa.j.tarasiewicz@usace.army.mil

Sincerely,

MELISSA J. TARASIEWICZ

Melissa Tarasiewicz
Biologist

Enclosures

APPENDIX E

T&E Species Coordination

Krokonko, Michael A.

From: Eric Stechschulte [estechschulte@lakemetroparks.com]
Sent: Wednesday, September 14, 2011 1:14 PM
To: Krokonko, Michael A.; Weber, Mitchell W.
Cc: 'Vince Urbanski'
Subject: FW: ODNR Waiver Request for In-Water Work
Attachments: CP11Wall-ODNR Waiver Request.pdf; ODNR In-stream Wavier Chagrin River PCN Attachments.pdf

See ODNR's response below.

Thanks,

Eric Stechschulte, RLA, ASLA
Landscape Architect
Lake Metroparks
(440) 352-2608
(440) 639-9126 Fax
www.lakemetroparks.com

-----Original Message-----
From: Jenkins, Becky [mailto:Becky.Jenkins@dnr.state.oh.us]
Sent: Wednesday, September 14, 2011 12:36 PM
To: estechschulte@lakemetroparks.com
Cc: Navarro, John
Subject: FW: ODNR Waiver Request for In-Water Work

Dear Mr. Stechschulte:

The Ohio Department of Natural Resources, Division of Wildlife does not object if in-water work is done to complete this project during the restricted period of September 15 to June 30. The U.S. Army Corps of Engineers (Corps) is the agency with the authority to establish permit conditions. Please keep in mind that if any Corps permits are involved, the Corps must also agree to waive the in-water work restriction dates.

Thank you for the opportunity to comment.

Becky Jenkins
Environmental Specialist
Ohio Department of Natural Resources
Division of Wildlife
Stream Conservation and Environmental Assessment Unit
2045 Morse Rd. Building G-3
Columbus, OH 43229
(614) 265-6631
FAX: (614) 265-1143
becky.jenkins@dnr.state.oh.us

Keep the Wild in Ohio, learn how you can help @ wildohiostamp.com

-----Original Message-----
From: Eric Stechschulte [mailto:estechschulte@lakemetroparks.com]
Sent: Mon 9/12/2011 8:12 AM

To: Navarro, John
Cc: 'Weber, Mitchell W.'; 'Vince Urbanski'
Subject: ODNR Waiver Request for In-Water Work

Mr. Navarro,

I've attached a letter requesting a waiver request for in-water stream activity in the Chagrin River in regards to Lake Metroparks Chagrin River Stream Bank Stabilization Wall. If you have any questions or need additional information, please contact me.

Thanks,

Eric Stechschulte, RLA, ASLA

Landscape Architect

Lake Metroparks

(440) 352-2608

(440) 639-9126 Fax

<http://www.lakemetroparks.com> www.lakemetroparks.com

United States Department of the Interior

FISH AND WILDLIFE SERVICE

Ecological Services
4625 Morse Road, Suite 104
Columbus, Ohio 43230
(614) 416-8993 / FAX (614) 416-8994

RECEIVED
FEB 17 2012
By

February 14, 2012

Michael A. Krokonko, Project Manager
Environmental Management and Remediation
Gannett Fleming Engineers and Architects
4151 Executive Parkway, Suite 350
Westerville, OH 43081

TAILS: 03E15000-2012-TA-0460/CPA0304

Reference: Chagrin River Park Bank Stabilization

Dear Mr. Krokonko

We have received your recent correspondence requesting information about the subject proposal. There are no Federal wilderness areas, wildlife refuges or designated critical habitat within the vicinity of the project area. Based on the information you have provided, at this time we have no objection to the proposed project.

ENDANGERED SPECIES COMMENTS: Due to the project type, size, and location, we do not anticipate any impact on federally listed endangered, threatened, or candidate species, or their habitats. Should the project design change, or during the term of this action, additional information on listed or proposed species or their critical habitat become available, or if new information reveals effects of the action that were not previously considered, consultation with the Service should be initiated to assess any potential impacts.

If you have additional questions or require further assistance with your project proposal, please contact me at the following number (614) 416-8993 x12. I would be happy to discuss the project in further detail with you and provide additional assistance if necessary. In addition, you can find more information on natural resources in Ohio, and a County list of federally threatened and endangered species in Ohio, by visiting our homepage at: http://www.fws.gov/midwest/ohio.

Sincerely,

Mary Knapp

Mary Knapp, Ph.D.
Field Supervisor

Ohio Department of Natural Resources

JOHN R. KASICH, GOVERNOR JAMES ZEHRINGER, DIRECTOR

Ohio Division of Wildlife
Scott Zody, Chief
2045 Morse Rd., Bldg. G
Columbus, OH 43229-6693
Phone: (614) 265-6300

March 1, 2012

Michael Krokonko
Gannett Fleming Engineers and Architects
4151 Executive Pkwy, Suite 350
Westerville, OH 43081

Dear Mr. Krokonko,

I have reviewed the Biodiversity Database for the Lake Metroparks - Chagrin River Park - Stream Bank Stabilization Project area, including a one mile radius, at Chagrin River Park in Willoughby Township, Lake County, Ohio, and on the Eastlake Quad. We have two records for rare or endangered species within the one mile radius of the project site. A list of the species and their locations on a map are included with this letter.

The site occurs within the Chagrin River Park. We are unaware of any additional unique ecological sites, geologic features, animal assemblages, scenic rivers, state wildlife areas, nature preserves, parks or forests, national wildlife refuges, parks or forests, or other protected natural areas within a one mile radius of the project area.

Our inventory program has not completely surveyed Ohio and relies on information supplied by many individuals and organizations. Therefore, a lack of records for any particular area is not a statement that rare species or unique features are absent from that area. Please note that although we inventory all types of plant communities, we only maintain records on the highest quality areas.

This letter only represents a review of rare species and natural features data within the Ohio Biodiversity Database. It does not fulfill coordination under the National Environmental Policy Act (NEPA) or the Fish and Wildlife Coordination Act (48 Stat. 401, as amended; 16 U.S. C. 661 et seq).and does not supersede or replace the regulatory authority of any local, state or federal agency nor relieve the applicant of the obligation to comply with any local, state or federal laws or regulations.

Please contact me at 614-265-6452 if I can be of further assistance.

Sincerely,

Greg Schneider

Greg Schneider, Administrator
Ohio Biodiversity Database Program

Lake Metroparks - Chagrin River Park - Stream Bank Stabilization Project

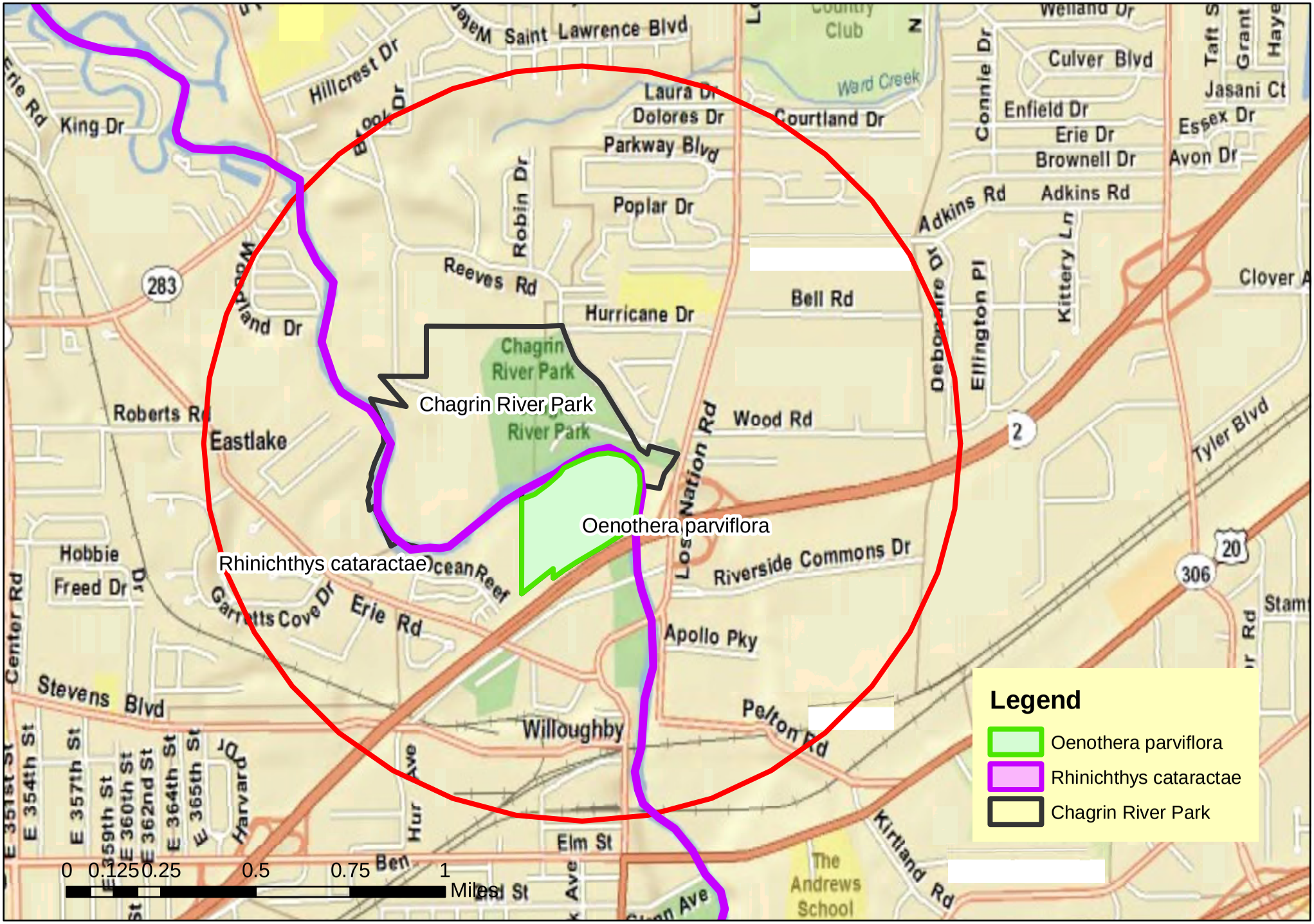

Ohio Biodiversity Database Records
Data within one mile Lake Metroparks - Chagrin River Park - Stream Bank Stabilization Project
3/1/2012

Last Recorded	Scientific Name	Common Name	State Status	Federal Status
Vascular Plant				
2001	*Oenothera parviflora*	Small-flowered Evening-pri	P	
Vertebrate Animal				
1977	*Rhinichthys cataractae*	Longnose Dace	SC	

P=Potentially Threatened, T=Threatened, E=Endangered, SC=Species of Concern
SI=Special Interest, FT=Federally Threatened, FE=Federally Endangered

APPENDIX F

Gannett Fleming's October 28, 2011 Project Summary Report

Gannett Fleming

Excellence Delivered As Promised

October 28, 2011

Melissa J. Tarasiewicz
Biologist
U.S. Army Corps of Engineers
Buffalo District Regulatory Branch
1776 Niagara Street
Buffalo, New York 14207

Re: Chagrin River Streambank Stabilization Project

Dear Ms. Tarasiewicz:

This correspondence provides additional information for the Chagrin River Park Stabilization Project. It addresses the comments and requests for clarification based on our conference call October 14th, this year.

Design Criteria

The design criteria for this project is:

- Protect foundation of the pedestrian bridge on the north slope;
- Retard the further erosion of the river bank where the hiking trail has collapsed into the river;
- Affect the least amount of stream bank practicable to accomplish project goals;
- Develop an alternative that exposes the least amount of the construction/demolition debris as practicable;
- Develop an alternative that facilitates the majority of the work being done from the top of bank (out of stream); and
- Develop an alternative with the least amount of environmental impacts.

Design Alternatives

The following is a matrix of the alternatives considered and the advantages and disadvantages to the project.

Alternative	Advantages	Disadvantages
Live Plant Cuttings	Natural Solution, Environmentally Friendly Aesthetically Pleasing	Highly Subject To Scour By Ice; Low Velocity Solution,
Dumped Tree Stumps w/ Live Plant Cuttings	Natural Solution; Environmentally Friendly, Provides Two Levels Of Protection.	Stumps In Needed Quantity Unavailable, Velocities Are Higher Than Commonly Used For This Protection. Highly Subject To Scour By Ice, Highly Subject To Snagging And Pullout By River Debris.
GeoWeb Green Wall (Cellular Wall System)	Can Be planted, disguising cells and facing. Aesthetically Pleasing.	Large Foot Print for Stability, Sliding Stability Concerns, Soil In Cells Subject To Scour By Water, Plastic Facing, Wall Subject To Damage By Ice Scour.
Dumped Rock	Easiest to build, Resist Water Velocities,	Highly Subject To Scour Or Damage By Ice, Safety Concerns for Visitors Walking over Rocks.
Geosynthetic Reinforced Soil Wall (GRS)	Easy to build, Resist Water Velocities, Low Maintenance	Possibly Subject To Scour Or Damage By Ice, Sliding Stability Concerns.
Concrete Gravity Wall	Meets All Stability and Velocity Criteria, Common Construction Means and Methods, Formed Lined Concrete Will Mimic A Stone Wall, Rapid Construction Means.	Aesthetically Least Appealing, Highest Construction Cost.

Only the Concrete Wall met all the stability and velocity requirements. The foundation rock surface slopes towards the mid-line of the stream, which presented stability challenges. The stone armoring and/or soil solutions require toe embedment for sliding stability but excavating rock in the stream was not a preferable choice. The GRS wall was taken to substantial design completeness but the ice uplift and block crushing concerns invalidated this alternative.

Wall Construction Affect on River Velocity

For this submission, we performed an additional analysis of the river channel velocities for the comparison of Pre-Construction and Post Construction affects. The work of this additional study is presented in Appendix A.

Using a composite cross-section based on the current side slopes (April 2011 survey) and river channel profile (2002 survey), GF modeled the flow on two-foot intervals for project elevation 82.0 to 96.0. The top of the wall is set at elevation 92.5. The peak flows for the 2, 5, 10, 25, 50, 100, and 500 year are estimated from the USGS StreamStats program. To compare the Pre- and Post Construction condition, models were run for the entire Wetter Perimeter (P) being "rough" and the entire P being "smooth". A weighted average of the contribution of the smooth and rough portions of the Wetted Perimeter was based on the portion (length) of the "smooth" wall perimeter to the rough, Pre-construction perimeter. The values are presented in Appendix A and summarized in the following table.

Pre-Construction vs Post Construction Velocity/Discharge Comparison

		Pre-Construction		Post Construction		Arithmetic Change		Percent Change	
		Velocity	Discharge	Velocity	Discharge	Velocity	Discharge	Velocity	Discharge
Project	USGS	V	Q	V	Q	V	Q	V	Q
Elev.	Water EL	(fps)	(cfs)	(fps)	(cfs)	(fps)	(cfs)	(%)	(%)
82.0	583.5	1.82	251	1.90	277	0.08	25.82	4%	10%
84.0	585.5	3.57	1,501	3.79	1,658	0.22	156.94	6%	10%
86.0	587.5	4.98		5.12		0.14		3%	0%

			3,643		3,633		(10.20)		
88.0	589.5	6.01	6,172	6.25	6,175	0.24	3.07	4%	0%
90.0	591.5	7.07	9,671	7.04	8,923	-0.04	(748.38)	-1%	-8%
92.0	593.5	7.87	13,427	7.84	12,508	-0.03	(918.82)	0%	-7%
94.0	595.5	8.49	17,507	8.39	16,299	-0.10	(1,207.96)	-1%	-7%
96.0	597.5	8.68	21,184	8.79	20,423	0.11	(761.51)	1%	-4%

Based on the USGS StreamStats, the Peak Discharge for the 500-year flood is about 18,200 cubic feet per second (cfs); The 500-year water surface profile is at about Project Elevation 94.0 ft. The **Pre-construction, 500-year velocity is about 8.5 feet per second (fps)**. **The Post Construction velocity is 8.4 fps,** which is virtually unchanged or slightly reduced for the pre-construction value. The total discharge quantity decreases as well.

Ice Affects on Riverbank Armoring

The final selection of a concrete retaining wall for protecting the Chagrin River Park stream bank was based on resistance to ice flow damage. Most of the hard armoring alternatives can resist the stream velocities expected in this portion of the river; however, the large, seasonal ice flows can be particularly damaging to large rock or reinforced soil stabilization alternatives. The following is an excerpt from the Federal Highway Administration's (FHWA) Publication No. FHWA –HI-90-016, *Highways in the River Environment* chapter that discusses how various natural and man-made phenomenon effect river hydraulics. *"Another serious effect is its (ice) influence on bank stability … For example, the ice layer may freeze into bank stabilization materials, and when the ice breaks up, large quantities of rock and other material embedded in the ice may be floated downstream and subsequently thawed loose and dumped randomly leaving banks raw and unprotected."*

Photographs 6 and 7 show some of the ice blocks that were deposited on the Chagrin River bank in January of 2011. Many of the blocks are greater than 4-foot thick and extend for tens of feet. Ice flows can move large objects in the stream channel by

brute force, e.g., "pushing" the object downstream or by freezing to the object and "floating" it downstream.

Similarly, a mass concrete wall resist the lateral forces that freezing ice exerts better than dumped rock or soil. The freezing ice lifts and moves the large rock out of the original placed configuration, often exposing the internal stream bank or causing a rock block to create an impingement point that causes eddies and erosional forces concentrated against and further degrading the stabilization.

Soft Armor Applicability

Soft armoring, bioremediation, or bioengineering are essentially synonyms for the process of reinforcing stream banks with live planting and/or dead, natural materials. Low velocity banks can be stabilized with grasses or live plant cuttings; higher velocity streams require hard armoring at the toe combined with one or more of the herbaceous or woody plantings in lower velocity zones of the repair. Most design references, including Technical Report ER-97-8 (April 1997), *Bioengineering for Erosion Control,* limit the woody and herbaceous planting solutions to channel sections with velocities less than 5 fps. More exotic bioremediation techniques like log cribs or root balls have been used in streams with measured velocities up to 8 fps.

Several site characteristics are unfavorable for the installation and successful application of bioremediation to the Chagrin River site. These include:

- Bioremediated sites need a significant keying (embedment) at the toe of the slope to prevent undercutting and washout. The rock bottom Chagrin River will not facilitate construction of a key trench.
- Bioremediation is applicable for slope ratios of 1.2:1 (H:V) or flatter slopes The current slope is nearly vertical.
- The scour from float ice and 'excavation' by ice wedging are major factors in the failure (wash out) of bioremediated slopes.
- To construct a stable soil slope to be bioremediated, a 2:1 or 3:1 slope would be required, which for the 12 foot high slope would need a 24- to 36-foot wide base. The physical constraints of the site would not facilitate that base.

- A bioengineered slope with a hard armored toe and splash zones and vegetative bank and terrace zones will suffer the same pitfalls as the ones described for the large rock armoring solutions, i.e., uplift and dislocation due to the ice.

It is our opinion that both common and exotic hard and soft armoring stream bank stabilization solutions for the Chagrin River project were thoroughly and fairly evaluated. Based on the project design criteria; river hydraulics; site constraints; geotechnical and geological engineering principles, and available construction technologies; our recommendation of a concrete gravity wall is the best engineering solution with the least environmental impacts. The project specifications prohibit the use of construction vehicles in the stream; the concrete is required to be membrane cured so no project water will be discharged into the stream; the amount of slope to be excavated has been minimized to restrict the loss of material into the stream; the form work will be bolted into the rock and sandbagged to prevent unintentional loss of concrete into the stream; and a Ashlar stone, concrete form-liner has been added that will provide roughness to the concrete surface.

Sincerely,

GANNETT FLEMING ENGINEERS AND ARCHITECTS, P.C.

Mitchell W. Weber

Mitchell W. Weber, P.G.
Vice President
Project Manager

MWW/mww
Attachment(s) (1)
c: Copy List
File GF Job #053136
Eric Stechshulte, Lake MetroParks

C:\Documents and Settings\mweber\My Documents\Work In Progress\Chagrin River Supplemental Information Letter10 19 11.doc

Photograph 1: Large concrete debris beneath the pedestrian bridge from Construction and Demolition Debris landfill along toe of slope. (Photo taken April 2010)

Photograph 2: Note the large concrete debris that was in the river in the above photo is gone, which demonstrates both the erosive and carrying capacity of the river. (Photo taken January 2011)

Photograph 3: Leachate (Iron oxide rich discharge) from Construction and Demolition (C&D) Landfill that the park is partially built upon. Note waste concrete blocks in lower left hand portion of photo. (Photo taken April 2010)

Photograph 4: Photo shows leachate running down the rock surface into river. Rock surface slopes towards the river. (Photo taken April 2010)

Photograph 5: Notice the large portion of soil between the arrows (Photo taken April 2010) has been eroded in the photo below taken August 2011. Width of the soil mass loss is greater than 10 feet.

Photograph 6: Large blocks for float ice deposited on the north bank at the fishing access steps. Ice blocks are 3-feet high or thicker. (Photo taken January 2011)

Photograph 7: Large blocks for float ice deposited on the south bank. Ice blocks are 3-feet high or thicker. (Photo taken January 2011)

APPENDIX A
Pre-Construction/Post Construction Velocity Comparisons

MANNING'S ROUGHNESS COEFFICIENTS

Pre construction

n_0 = BASE value 0.025 { see Table 2.3.1, Attached }

n_1 = X-section Irregularity { see TABLE 2.3.2, ATTACHED }

n_2 = VARIATIONS IN CHANNEL SECTION

n_3 = Obstruction's

n_4 = VEGETATION

m_5 = SINUOSITY

$n_1 = 0.006$
$n_2 = 0$
$n_3 = 0.004$
$n_4 = 0.002$
$m_5 = 1.0$

$n = (n_0 + n_1 + n_2 + n_3 + n_4)\, m_5$

$n = (0.025 + 0.006 + 0 + 0.004 + 0.002)\, 1.0$
$= \underline{\underline{0.037}}$

POST CONSTRUCTION

$n_0 = 0.025$

$n_1 = 0$

$n_2 = 0$

$n_3 = 0$

$n_4 = 0.002$

$m_5 = 1.0$

$n = (0.025 + 0 + 0 + 0 + 0.002)\, 1.0$

$n = \underline{\underline{0.027}}$

This value would assume the entire WETTED PERIMETER is "smooth" which is not correct since only the wall section roughness has changed. Weight Average "n" will be calculated

Gannett Fleming

SUBJECT CHAGRIN RIVER PARK
COMPARISON OF STREAM VELOCITY

SHEET NO. 2 OF 10
JOB NO. 053136.

BY MWW DATE 10/11 CHKD. BY DATE

based on wall length of 12 FT. Calculation are shown on attached spread sheets.

Table 2.3.1 Manning's roughness coefficients for various boundaries
Continued

Trees	
1. Dense willows, summer, straight	0.110-0.200
2. Cleared land with tree stumps, no sprouts	0.030-0.050
3. Same as above, but with heavy growth of sprouts	0.050-0.080
4. Heavy stand of timber, a few down trees, little undergrowth, flood stage below branches	0.080-0.120
5. Same as above, but with flood stage reaching branches	0.100-0.160
MAJOR STREAMS (Top width at flood stage > 100 ft). The n value is less than that for minor streams of similar description, because banks offer less effective resistance.	
Regular section with no boulders or brush	0.025-0.060
Irregular and rough section	0.035-0.100
ALLUVIAL SANDBED CHANNELS (no vegetation)[1]	
Tranquil flow, Fr < 1	
plane bed	0.014 - 0.020
ripples	0.018 - 0.030
dunes	0.020 - 0.040
washed out dunes or transition	0.014 - 0.025
plane bed	0.010 - 0.013
Rapid Flow, Fr > 1	
standing waves	0.010 - 0.015
antidunes	0.012 - 0.020

[1] Data is limited to sand channels with D_{50} < 1.0 mm, details to be discussed in Chapter III.

Table 2.3.2 Adjustment factors for the determination of n values

		Conditions	n Value	Remarks
Cross-section Irregularity	n_1	Smooth	0	Smoothest Channel
		Minor	0.001 -0.005	Slightly Eroded Side Slopes
		Moderate	0.006-0.010	Moderately Rough Bed and Banks
		Severe	0.01[illegible] -0.020	Badly Sloughed & Scalloped Banks
Variations In Channel Section	n_2	Gradual	0	Gradual Changes
		Alternating Occasionally	0.001 -0.005	Occasional Shifts From Large to Small Sections
		Alternating Frequently	0.010-0.015	Frequent Changes In Cross-Sectional shape
Obstructions	n_3	Negligible	0-0.004	Obstructions < 5% of Cross-Section Area
		Minor	0.005-0.015	Obstructions < 15% of Cross-Section Area
		Moderate	0.020-0.030	Obstructions 15-50% of Cross-Section Area
		Severe	0.040-0.060	Obstructions > 50% of Cross-Section Area
Vegetation	n_4	Small	0.002-0.010	Flow Depth > 2 x Vegetation Height
		Medium	0.010-0.025	Flow Depth > Vegetation Height
		Large	0.025-0.050	Flow Depth <Vegetation Height
		Very Large	0.050-0.100	Flow Depth < 0.5 Vegetation Height.
Sinuosity	m_5	Minor	1.00	Sinuosity < 1.2
		Moderate	1.15	1.2 < Sinuosity < 1.5
		Severe	1.30	Sinuosity > 1.5

USGS
Ohio StreamStats

Streamstats Ungaged Site Report

Date: Tue May 24 2011 12:49:07 Mountain Daylight Time
Site Location: Ohio
NAD27 Latitude: 41.6574 (41 39 26)
NAD27 Longitude: -81.4097 (-81 24 35)
NAD83 Latitude: 41.6574 (41 39 27)
NAD83 Longitude: -81.4096 (-81 24 34)
Drainage Area: 251 mi2

Peak Flows Basin Characteristics

100% Peak Flow Full Model (251 mi2)

Parameter	Value	Regression Equation Valid Range	
		Min	Max
Drainage Area (square miles)	251	0.01	7422
Ohio Region C Indicator 1 if in C else 0 (dimensionless)	0	0	1
Ohio Region A Indicator 1 if in A else 0 (dimensionless)	1	0	1
Stream Slope 10 and 85 Longest Flow Path (feet per mi)	12.9	1.53	674
Percent Storage from NLCD (percent)	5.61	0	25.8

Mean and Percentile Basin Characteristics

Y coordinate (latitude) of the centroid in decimal degrees=41.4892

100% Low Flow Lattitude GT 41.2 (251 mi2)

Parameter	Value	Regression Equation Valid Range	
		Min	Max
Drainage Area (square miles)	251	0.12	7422
Percent Forest (percent)	59.7	0	99.1
Percent Storage from NLCD (percent)	5.61	0	19
Mean Annual Precipitation (inches)	42.2	34	43.2
Streamflow Variability Index (dimensionless)	0.45	0.25	1.13
Latitude of Basin Centroid (decimal degrees)	41.4893	41.2	41.59
Longitude of Basin Centroid (decimal degrees)	81.3421	80.53	84.6

Peak Flows Streamflow Statistics

Statistic	Flow (ft^3/s)	Prediction Error (percent)	Equivalent years of record	90-Percent Prediction Interval	
				Minimum	Maximum
PK2	5120	37	2.1	2730	9610
PK5	7540	35	3.3	4170	13700
PK10	9270	34	4.4	5120	16800
PK25	11400	35	5.9	6190	21000
PK50	13000	37	6.8	6890	24400
PK100	14600	38	7.5	7570	28100
PK500	18200	42	8.6	8830	37600

Mean and Percentile Streamflow Statistics

Statistic	Flow (ft^3/s)	Prediction Error (percent)	Equivalent years of record	90-Percent Prediction Interval	
				Minimum	Maximum
Q1	515	17			
Q2	630	12			
Q3	732	14			
Q4	568	11			
Q5	334	20			

Q6	196	27			
Q7	125	28			
Q8	137	37			
Q9	105	44			
QA	360	11			
Q10	194	51			
Q11	326	38			
Q12	510	22			
QAH	82.8	66			
FPS25	51.1	29			
FPS50	121	40			
FPS75	290	48			

Calculated By: M.W. Weber
Checked By: T.L. Monaco
Date: October 2011

Gannett Fleming
Engineers and Architects, P.C.
Excellence Delivered As Promised

Chagrin River Streambank Stabilization
Cross-sectional Hydraulic Analysis
September 1, 2011
Pre Construction (Assumes entire Wetted Perimeter has Rough "n")

Project Elev.	USGS Water EL	Area	P	R_h	$R_h^{2/3}$	S	$S^{1/2}$	n	V	Q
82.0	583.5	138.00	134.00	1.03	1.02	0.001961	0.0442832	0.037	1.82	251
84.0	585.5	420.00	148.00	2.84	2.00	0.001961	0.0442832	0.037	3.57	1,501
86.0	587.5	732.00	157.00	4.66	2.79	0.001961	0.0442832	0.037	4.98	3,643
88.0	589.5	1027.00	166.00	6.19	3.37	0.001961	0.0442832	0.037	6.01	6,172
90.0	591.5	1367.00	173.00	7.90	3.97	0.001961	0.0442832	0.037	7.07	9,671
92.0	593.5	1706.00	184.00	9.27	4.41	0.001961	0.0442832	0.037	7.87	13,427
94.0	595.5	2061.20	198.30	10.39	4.76	0.001961	0.0442832	0.037	8.49	17,507
96.0	597.5	2439.40	227.00	10.75	4.87	0.001961	0.0442832	0.037	8.68	21,184

Post Construction (Assumes entire Wetted Perimeter has Smooth "n").

Project Elev.	USGS Water EL	Area	P	R_h	$R_h^{2/3}$	S	$S^{1/2}$	n	V	Q
82.0	583.5	146.00	133.20	1.10	1.06	0.001961	0.0442832	0.027	2.60	379
84.0	585.5	437.00	141.60	3.09	2.12	0.001961	0.0442832	0.027	5.18	2,264
86.0	587.5	710.00	147.70	4.81	2.85	0.001961	0.0442832	0.027	6.96	4,942
88.0	589.5	988.00	153.00	6.46	3.47	0.001961	0.0442832	0.027	8.47	8,373
90.0	591.5	1268.00	165.00	7.68	3.89	0.001961	0.0442832	0.027	9.52	12,067
92.0	593.5	1595.00	177.00	9.01	4.33	0.001961	0.0442832	0.027	10.58	16,879
94.0	595.5	1941.80	195.00	9.96	4.63	0.001961	0.0442832	0.027	11.31	21,964
96.0	597.5	2322.70	217.00	10.70	4.86	0.001961	0.0442832	0.027	11.87	27,568

Calculated By: M.W. Weber
Checked By: T.L. Monaco
Date: October 2011

Weighted Average Calculation for Wetter Perimeter

Project Elev. FT	Wetted Perimeter P	Smooth Length ft	Rough Length ft	Smooth n %P	Rough n %P	Smooth n Value	Rough n Value	Smooth n Contribution	Rough n Contribution	Weighted Average n
82.0	133.20	0	133.20	0	1	0.027	0.037	0.0000	0.0370	0.0370
84.0	141.60	2	139.60	0.01412	0.98588	0.027	0.037	0.0004	0.0365	0.0369
86.0	147.70	4	143.70	0.02708	0.97292	0.027	0.037	0.0007	0.0360	0.0367
88.0	153.00	6	147.00	0.03922	0.96078	0.027	0.037	0.0011	0.0355	0.0366
90.0	165.00	8	157.00	0.04848	0.95152	0.027	0.037	0.0013	0.0352	0.0365
92.0	177.00	10	167.00	0.05650	0.94350	0.027	0.037	0.0015	0.0349	0.0364
94.0	195.00	12	183.00	0.06154	0.93846	0.027	0.037	0.0017	0.0347	0.0364
96.0	217.00	12	205.00	0.05530	0.94470	0.027	0.037	0.0015	0.0350	0.0364

Post Construction Averaged Manning's "n" values for Wetted Perimeter

Project Elev.	USGS Water EL	Area	P	R_h	$R_h^{2/3}$	S	$S^{1/2}$	n	V	Q
82.0	583.5	146.00	133.20	1.10	1.06	0.00196	0.04428	0.03700	1.90	277
84.0	585.5	437.00	141.60	3.09	2.12	0.00196	0.04428	0.03686	3.79	1,658
86.0	587.5	710.00	147.70	4.81	2.85	0.00196	0.04428	0.03673	5.12	3,633
88.0	589.5	988.00	153.00	6.46	3.47	0.00196	0.04428	0.03661	6.25	6,175
90.0	591.5	1268.00	165.00	7.68	3.89	0.00196	0.04428	0.03652	7.04	8,923
92.0	593.5	1595.00	177.00	9.01	4.33	0.00196	0.04428	0.03644	7.84	12,508
94.0	595.5	1941.80	195.00	9.96	4.63	0.00196	0.04428	0.03638	8.39	16,299
96.0	597.5	2322.70	217.00	10.70	4.86	0.00196	0.04428	0.03645	8.79	20,423

Calculated By: M.W. Weber
Checked By: T.L. Monaco
Date: October 2011

Pre-Construction vs Post Construction Velocity/Discharge Comparision

		PreConstruction		Post Construction		Arthimetic Change		Percent Change	
		Velocity	Discharge	Velocity	Discharge	Velocity	Discharge	Velocity	Discharge
Project	USGS	V	Q	V	Q	V	Q	V	Q
Elev.	Water EL	(fps)	(cfs)	(fps)	(cfs)	(fps)	(cfs)	(%)	(%)
82.0	583.5	1.82	251	1.90	277	0.08	25.82	4%	10%
84.0	585.5	3.57	1,501	3.79	1,658	0.22	156.94	6%	10%
86.0	587.5	4.98	3,643	5.12	3,633	0.14	(10.20)	3%	0%
88.0	589.5	6.01	6,172	6.25	6,175	0.24	3.07	4%	0%
90.0	591.5	7.07	9,671	7.04	8,923	-0.04	(748.38)	-1%	-8%
92.0	593.5	7.87	13,427	7.84	12,508	-0.03	(918.82)	0%	-7%
94.0	595.5	8.49	17,507	8.39	16,299	-0.10	(1,207.96)	-1%	-7%
96.0	597.5	8.68	21,184	8.79	20,423	0.11	(761.51)	1%	-4%

Based on the USGS Stream Stats Peak Discharge for the 500-year flood of 18,200 cfs; the 500-years velocity is about 8.5 fps. ThePre-Con vs. Post Con Velocity is virtually unchanged going from 8.5 to 8.4 fps.

Pre-Construction Cross-section

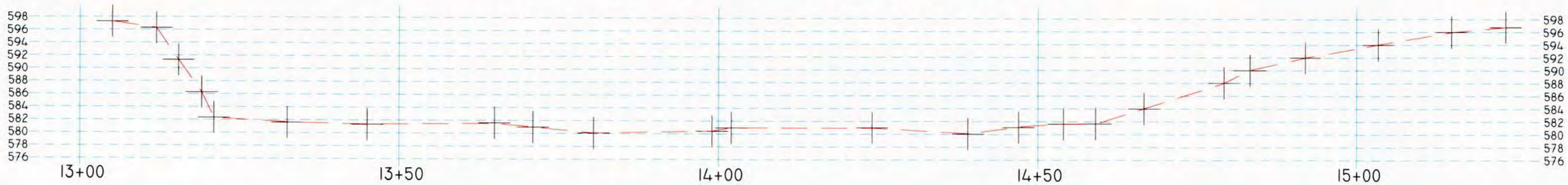

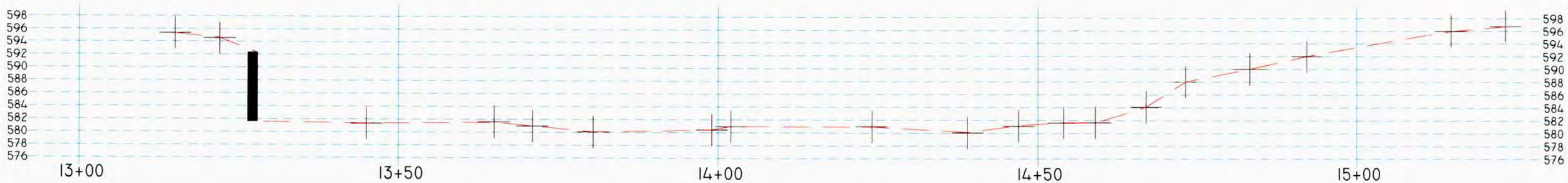

Post-Construction Cross-section

Chagrin River Park Streambank Stabilization
Hydraulic Cross-section
Based on 2005 Lake MetroParks Site Survey
and April 2011 Gannett Fleming Topographic Survey

APPENDIX G

Mitigation