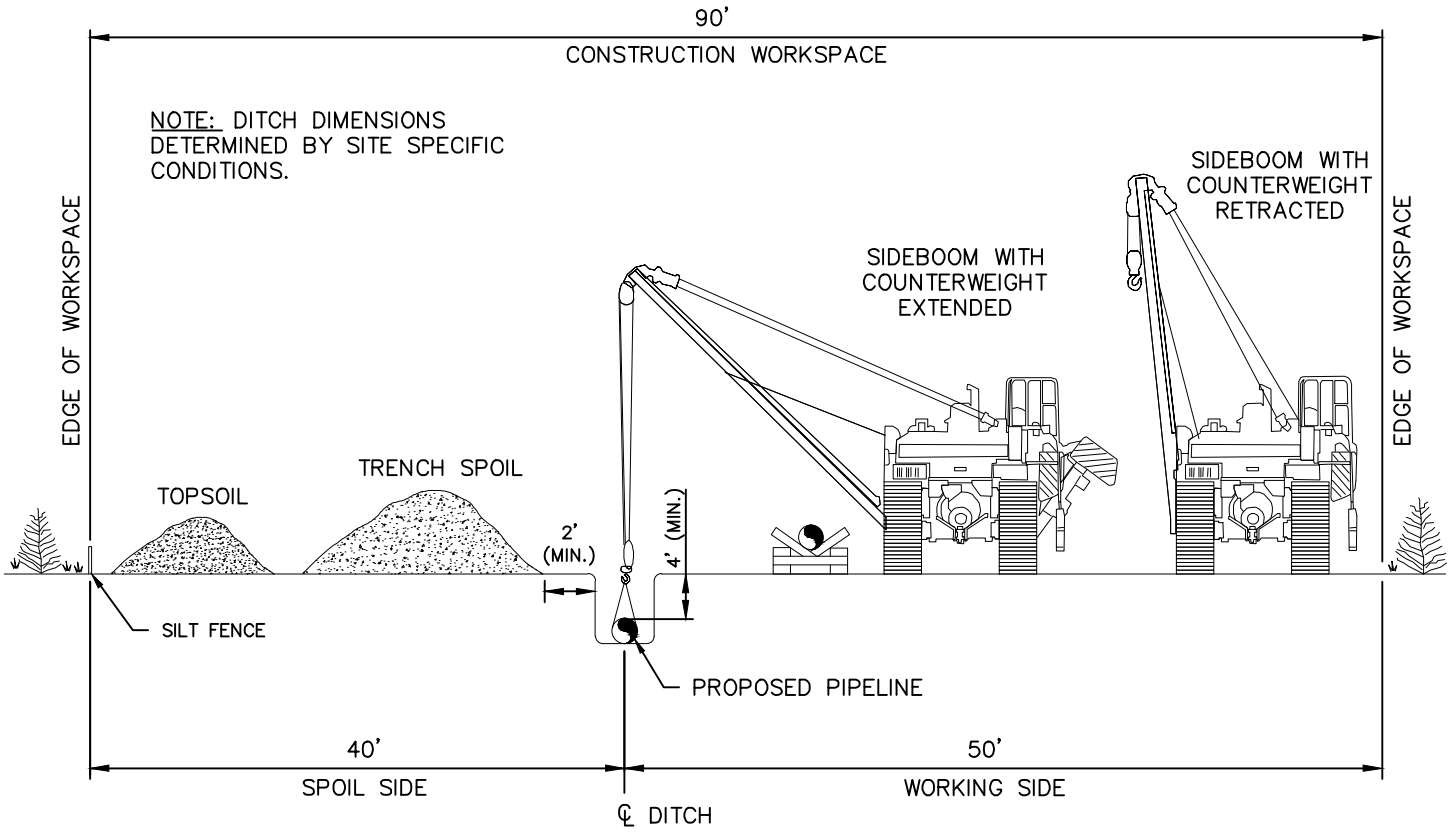

NOTE:

1. TOPSOIL & TRENCH SPOIL MAY BE STORED ABOVE EXISTING LINE WITH APPROVAL.

2. SEE FOREIGN PIPELINE CROSSING AGREEMENT FOR ADDITIONAL REQUIREMENTS.

NO.	REVISION DESCRIPTION	BY	DATE	CHK'D	APP'D
		GIE	4-21-15	CN	TT

GULF INTERSTATE ENGINEERING

DWN. BY:	GIE	6-12-14
CHK.	JM	6-12-14
PROJ. ENGR.	VH	6-12-14
PROJ. MGR.	TT	6-12-14
CLIENT APP.		
SCALE:	N.T.S.	

Marathon Pipe Line LLC

PROPOSED CORNERSTONE PIPELINE

TYPICAL CONSTRUCTION RIGHT-OF-WAY FOR 16" OR LESS DIAMETER PIPELINE

DWG. NO.	SHT. NO.	REV.
1647-100-DG-7510	1 OF 1	

H:_doc\1647\Engineering & Technical\10_Pipeline\Mapping\DWG\Typicals\Environmental Use\1647-100-DG-7510.DWG Plotted on: Apr 21, 2015 - 10:12am by bbrooks

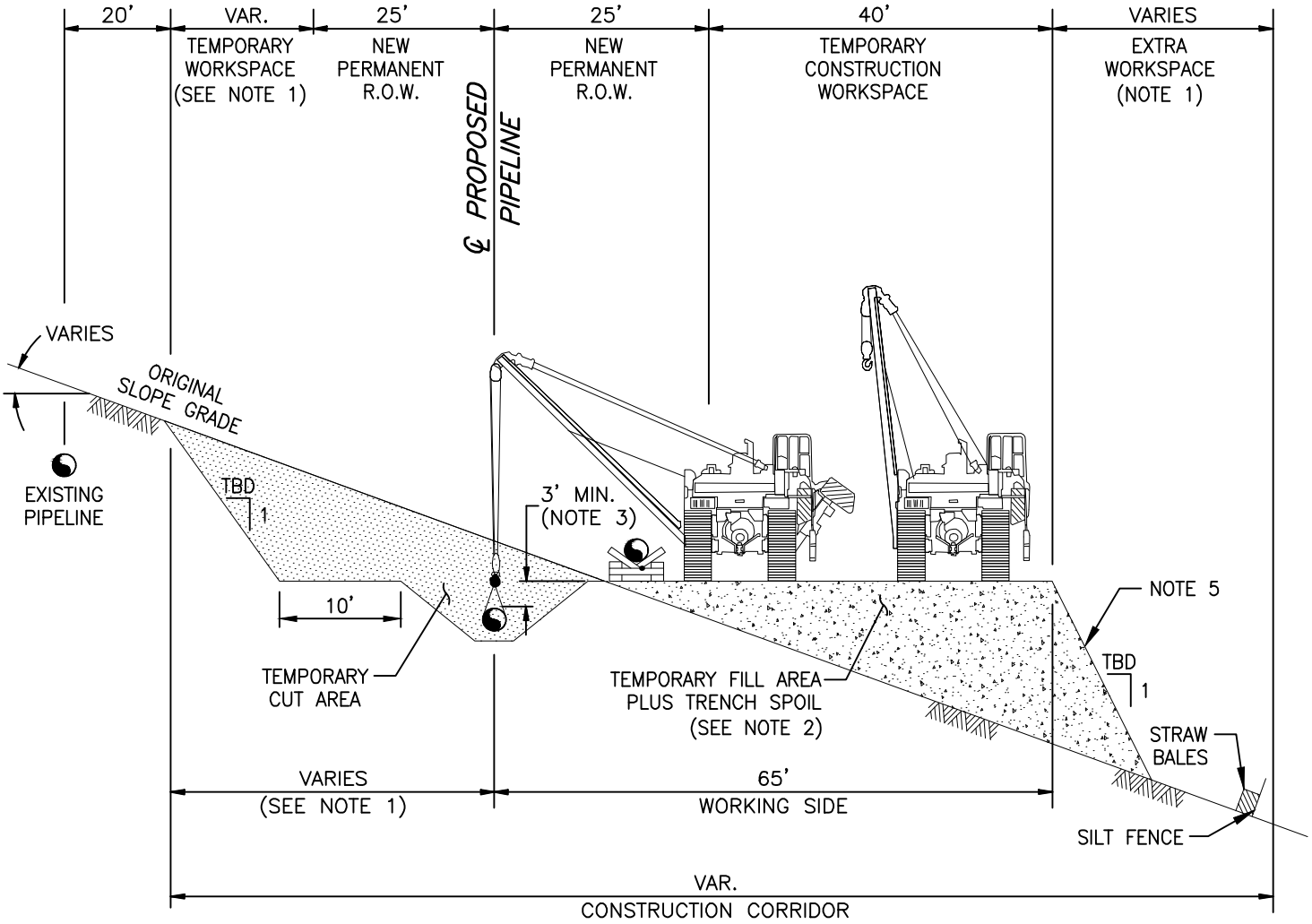

NOTES:

1. BENCH THE RIGHT-OF-WAY TO LIMIT THE NEED FOR DEEP CUTS AND ADDITIONAL RIGHT-OF-WAY ON STEEP SIDE SLOPES.
2. CLEAR AND STAKE RIGHT-OF-WAY TO ALLOW FOR EXTRA SPOIL.
3. ENSURE SIDE BOOM TRACTORS ARE EQUIPPED WITH BOOM EXTENDERS AND COUNTER-WEIGHTS IF REQUIRED.
4. EMPLOY EROSION CONTROL MEASURES SUCH AS BREAKERS, CROSS DITCHES, BERMS AND REVEGETATION.
5. ADDITIONAL BENCHING MAY BE REQUIRED IN ORDER TO FOLLOW OSHA AND GOOD EXCAVATION PRACTICES.
6. SEE FOREIGN PIPELINE CROSSING AGREEMENT FOR ADDITIONAL REQUIREMENTS. EQUIPMENT SHALL MAINTAIN APPROPRIATE CLEARANCE FROM FOREIGN PIPELINES.
7. SITE RESTORATION TO ORIGINAL GRADE REQUIRED UNLESS OTHERWISE PERMITTED BY LAND OWNER.

NO.	REVISION DESCRIPTION	BY	DATE	CHK'D	APP'D
		GIE	4-21-15	CN	TT

GULF INTERSTATE ENGINEERING

DWN. BY:	GIE	6-12-14
CHK.	JM	6-12-14
PROJ. ENGR.	VH	6-12-14
PROJ. MGR.	TT	6-12-14
CLIENT APP.		
SCALE:	N.T.S.	

Marathon Pipe Line LLC

PROPOSED CORNERSTONE PIPELINE

TYPICAL WORKSPACE REQUIREMENTS FOR TWO-TONING THE ROW (PARALLEL EXISTING LINE)

DWG. NO. 1647-100-DG-7512 | SHT. NO. 1 OF 1 | REV.

H:_doc\1647\Engineering & Technical\10_Pipeline\Mapping\DWG\Typicals\Environmental Use\1647-100-DG-7512.DWG Plotted on: Apr 21, 2015 - 10:16am by bbrooks

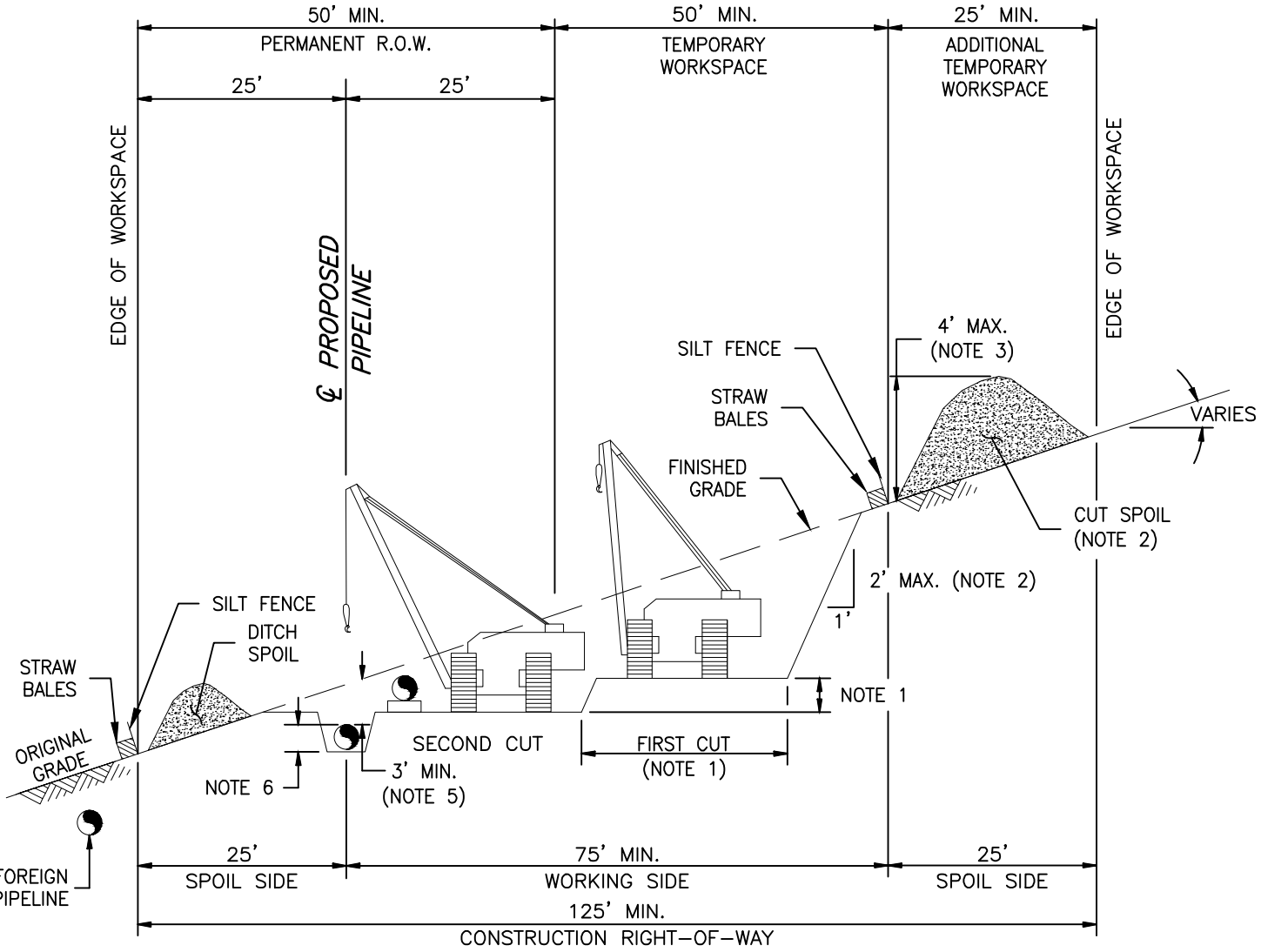

NOTES:

1. MINIMIZE FIRST CUT DEPTH : WIDTH TO ALLOW A SINGLE TRAVEL LANE AND SECOND CUT DEPTH : WIDTH TO ALLOW SAFE PIPE LAY.
2. MAXIMUM CUT SLOPE IS 2V:1H.
3. MAXIMUM SPOIL PILE HEIGHT IS 4' TO DOWNSLOPE TOE.
4. SPOIL TO BE RETURNED TO CUT AREA UPON COMPLETION OF INSTALLATION OF PIPE AND ORIGINAL SLOPE RESTORED.
5. MINIMUM COVER IS 3' FROM FINISHED GRADE TO TOP OF PIPE AND 2' IN CONSOLIDATED ROCK.
6. UNDISTURBED TRENCH WALLS MUST EXTEND TO TO TOP OF PIPE.
7. TOTAL WORK SPACE IS DEPENDANT ON SLOPE OF ORIGINAL GRADE.

NO.	REVISION DESCRIPTION	BY	DATE	CHK'D	APP'D
		GIE	4-21-15	CN	TT

GULF INTERSTATE ENGINEERING

Marathon Pipe Line LLC
Houston, Texas 77056

DWN. BY:	GIE	8-25-14
CHK.	JM	8-25-14
PROJ. ENGR.	VH	8-25-14
PROJ. MGR.	TT	8-25-14
CLIENT APP.		
SCALE:	N.T.S.	

PROPOSED CORNERSTONE PIPELINE

TYPICAL WORKSPACE REQUIREMENTS FOR TWO-TONING THE ROW (PARALLEL EXISTING LINE) - FALL BAD

DWG. NO. 1647-100-DG-7513 | SHT. NO. 1 OF 1 | REV.

H:_doc\1647\Engineering & Technical\10_Pipeline\Mapping\DWG\Typicals\Environmental Use\1647-100-DG-7513.DWG Plotted on: Apr 21, 2015 - 10:17am by bbrooks

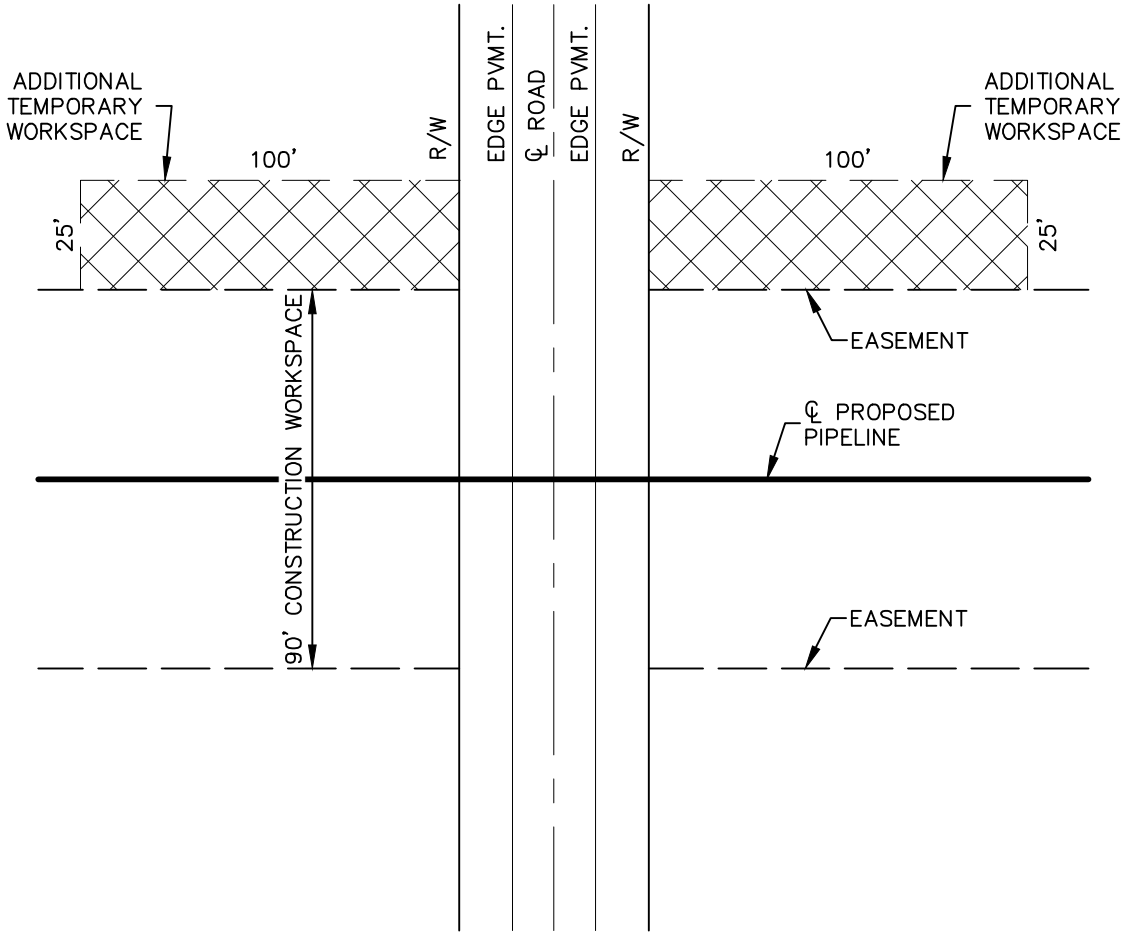

NOTE:

1. ADDITIONAL TEMPORARY WORKSPACE MAY BE REQUIRED ON EITHER SIDE OF THE CONSTRUCTION CORRIDOR DEPENDING ON SITE CONDITIONS.
2. SEE SITE SPECIFIC DRAWINGS AND PERMIT CONDITIONS TO LOCATE AND SIZE THE REQUIRED/AVAILABLE ATWS.

NO.	REVISION DESCRIPTION	BY	DATE	CHK'D	APP'D
		GIE	4-21-15	CN	TT

GULF INTERSTATE ENGINEERING

DWN. BY:	GIE	6-12-14
CHK.	JM	6-12-14
PROJ. ENGR.	VH	6-12-14
PROJ. MGR.	TT	6-12-14
CLIENT APP.		
SCALE:	N.T.S.	

Marathon Pipe Line LLC

PROPOSED CORNERSTONE PIPELINE

TYPICAL ADDITIONAL TEMPORARY WORKSPACE CONFIGURATION AT PAVED ROAD CROSSINGS

DWG. NO.	SHT. NO.	REV.
1647-100-DG-7516	1 OF 1	

H:_doc\1647\Engineering & Technical\10_Pipeline\Mapping\DWG\Typicals\Environmental Use\1647-100-DG-7516.DWG Plotted on: Apr 21, 2015 - 10:20am by bbrooks

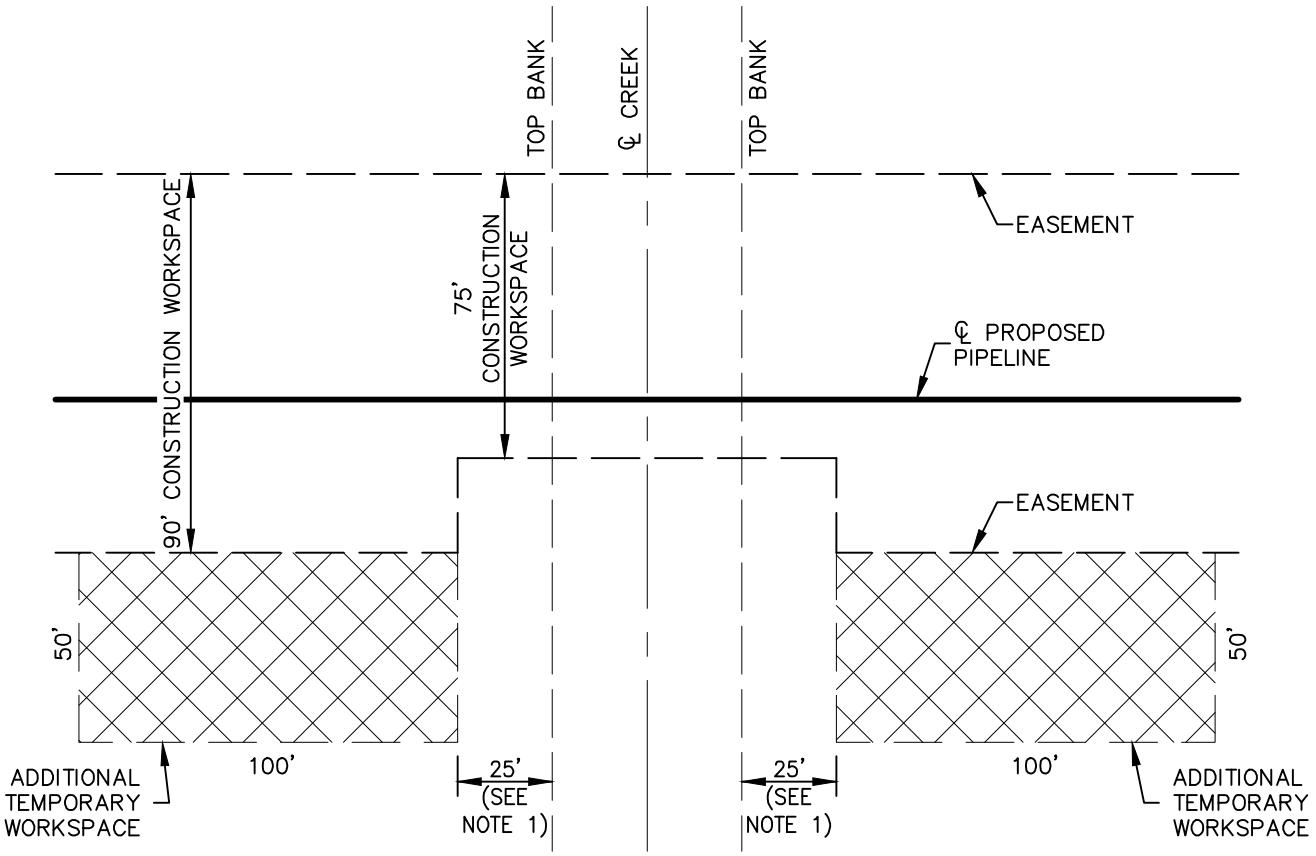

NOTE:

1. TYPICAL ADDITIONAL TEMPORARY WORKSPACE SETBACK IS 25 FEET FROM TOP OF BANK OR AS OTHERWISE REQUIRED BY PERMIT RESTRICTIONS.

NO.	REVISION DESCRIPTION	BY	DATE	CHK'D	APP'D
		GIE	4-21-15	CN	TT

GULF INTERSTATE ENGINEERING

DWN. BY:	GIE	6-12-14
CHK.	JM	6-12-14
PROJ. ENGR.	VH	6-12-14
PROJ. MGR.	TT	6-12-14
CLIENT APP.		
SCALE:	N.T.S.	

Marathon Pipe Line LLC

PROPOSED CORNERSTONE PIPELINE

TYPICAL ADDITIONAL TEMPORARY WORKSPACE CONFIGURATION AT WATERBODY CROSSINGS

DWG. NO.	SHT. NO.	REV.
1647-100-DG-7517	1 OF 1	

H:_doc\1647\Engineering & Technical\10_Pipeline\Mapping\DWG\Typicals\Environmental Use\1647-100-DG-7517.DWG Plotted on: Apr 21, 2015 - 10:20am by bbrooks

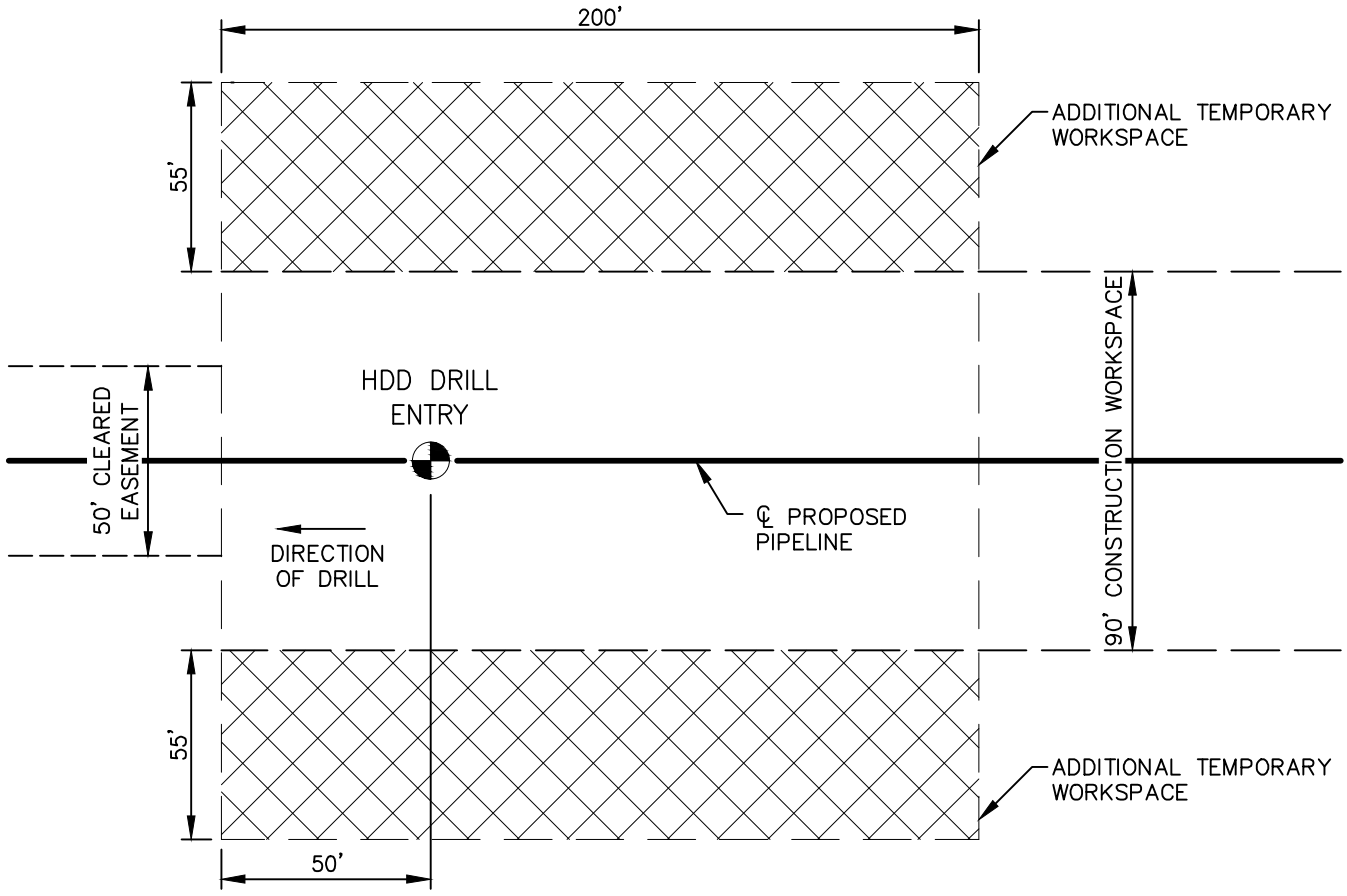

NO.	REVISION DESCRIPTION	BY	DATE	CHK'D	APP'D
		GIE	4–21–15	CN	TT

GULF INTERSTATE ENGINEERING

Marathon Pipe Line LLC

DWN. BY:	GIE	6–12–14
CHK.	JM	6–12–14
PROJ. ENGR.	VH	6–12–14
PROJ. MGR.	TT	6–12–14
CLIENT APP.		
SCALE:	N.T.S.	

PROPOSED CORNERSTONE PIPELINE

TYPICAL DRILL WORKSPACE CONFIGURATION AT HORIZONTAL DIRECTIONAL DRILL LOCATIONS - ENTRY

DWG. NO.	SHT. NO.	REV.
1647-100-DG-7518	1 OF 1	

H:_doc\1647\Engineering & Technical\10_Pipeline\Mapping\DWG\Typicals\Environmental Use\1647-100-DG-7518.DWG Plotted on: Apr 21, 2015 - 10:21am by bbrooks

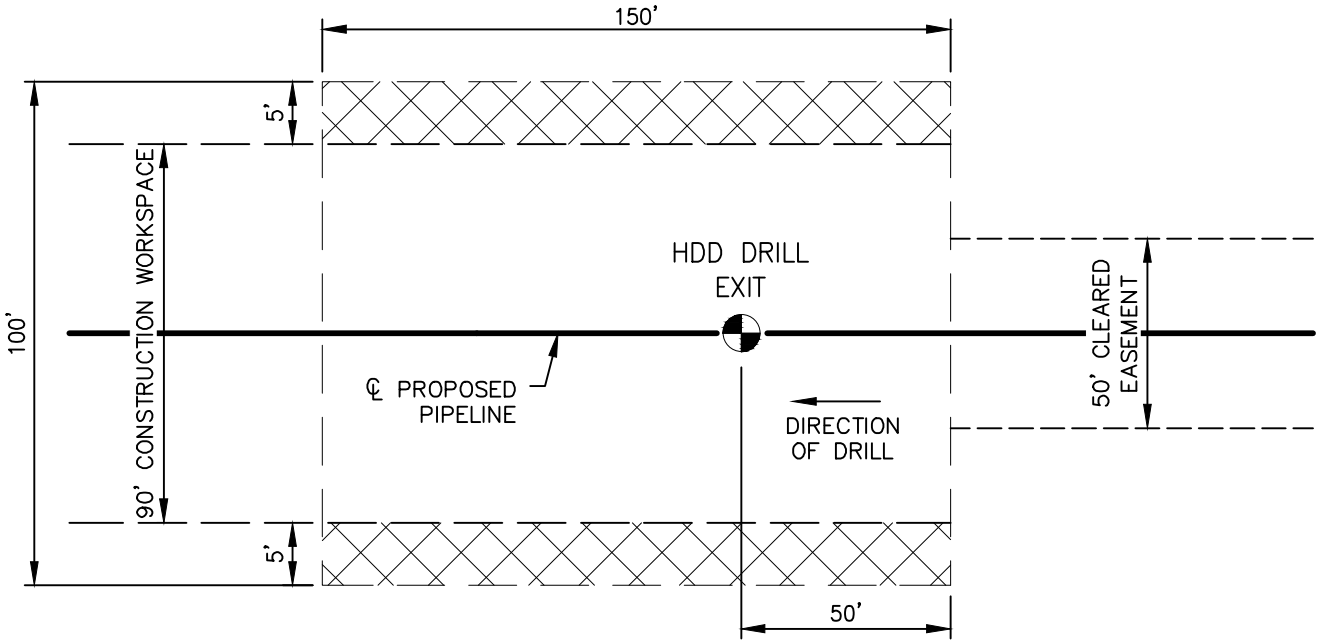

NO.	REVISION DESCRIPTION	BY	DATE	CHK'D	APP'D
		GIE	4-21-15	CN	TT

GULF INTERSTATE ENGINEERING

DWN. BY:	GIE	8-20-14
CHK.	JM	8-21-14
PROJ. ENGR.	VH	
PROJ. MGR.	TT	
CLIENT APP.		
SCALE:	N.T.S.	

Marathon Pipe Line LLC

PROPOSED CORNERSTONE PIPELINE

TYPICAL DRILL WORKSPACE CONFIGURATION AT HORIZONTAL DIRECTIONAL DRILL LOCATIONS - EXIT

DWG. NO.	SHT. NO.	REV.
1647-100-DG-7519	1 OF 1	

H:_doc\1647\Engineering & Technical\10_Pipeline\Mapping\DWG\Typicals\Environmental Use\1647-100-DG-7519.DWG Plotted on: Apr 21, 2015 - 10:23am by bbrooks

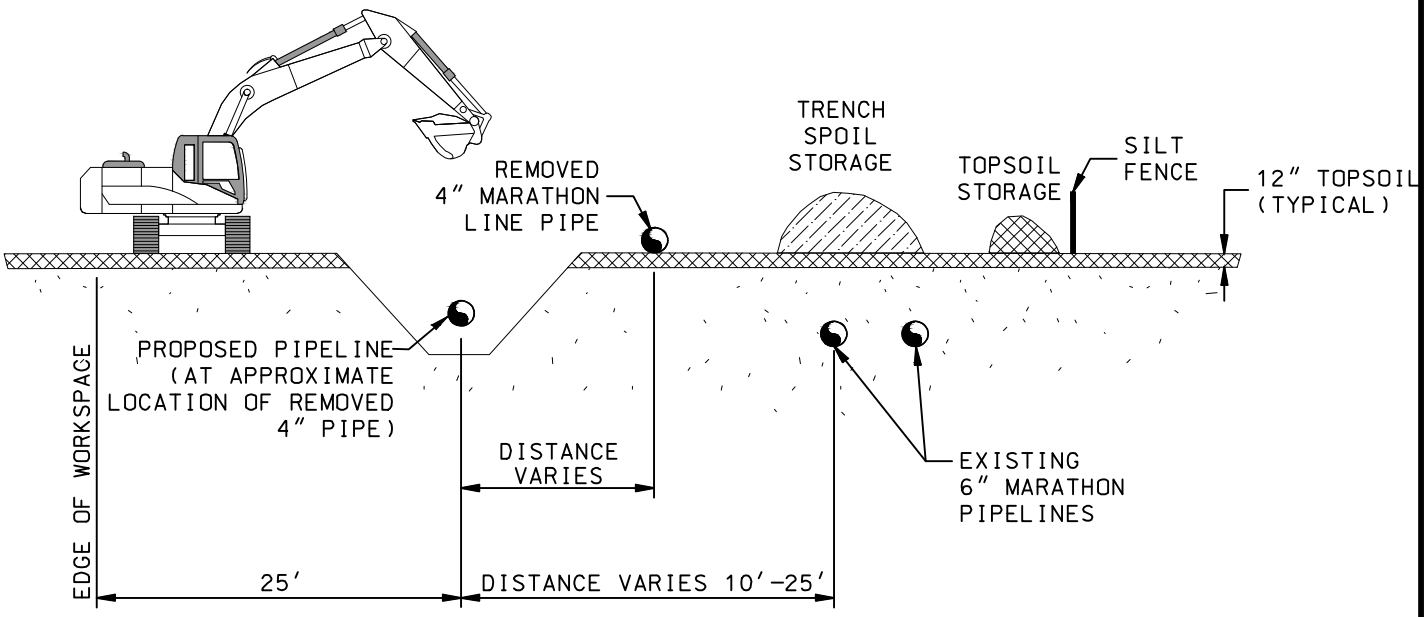

NOTES:

1. TOPSOIL SEGREGATION IS REQUIRED FOR EXCAVATED TRENCH SPOILS IN CULTIVATED LANDS AND WETLAND AREAS AND AS NOTED ON LANDOWNER EXCEPTION LIST.

2. TYPICAL FOREIGN PIPELINE CROSSING MATTING SHOULD BE USED TO PROTECT THE EXISTING MARATHON PIPELINES, PER DWG. 1647-100-DG-7535.

3. THE 4" MARATHON LINE PIPE IS TO BE CUT INTO 20 FT. SEGMENTS AND REMOVED FROM THE ACTIVE WORK AREA TO ALLOW RE-PLACEMENT OF THE TRENCH FILL AND TOP SOIL.

NO.	REVISION DESCRIPTION	BY	DATE	CHK'D	APP'D
		GIE	4-21-15	CN	TT

GULF INTERSTATE ENGINEERING

DWN. BY:	GIE	6-12-14
CHK.	JM	6-12-14
PROJ. ENGR.	VH	6-12-14
PROJ. MGR.	TT	6-12-14
CLIENT APP.		
SCALE:	N.T.S.	

Marathon Pipe Line LLC

PROPOSED CORNERSTONE PIPELINE
RIGHT-OF-WAY CROSS SECTION
FOR REMOVAL OF EXISTING PIPELINE
W / TOPSOIL SEGREGATION

DWG. NO.	SHT. NO.	REV.
1647-100-DG-7520	1 OF 1	

H:_doc\1647\Engineering & Technical\10_Pipeline\Mapping\DWG\Typicals\Environmental Use\1647-100-DG-7520.DWG Plotted on: Apr 21, 2015 - 10:24am by bbrooks

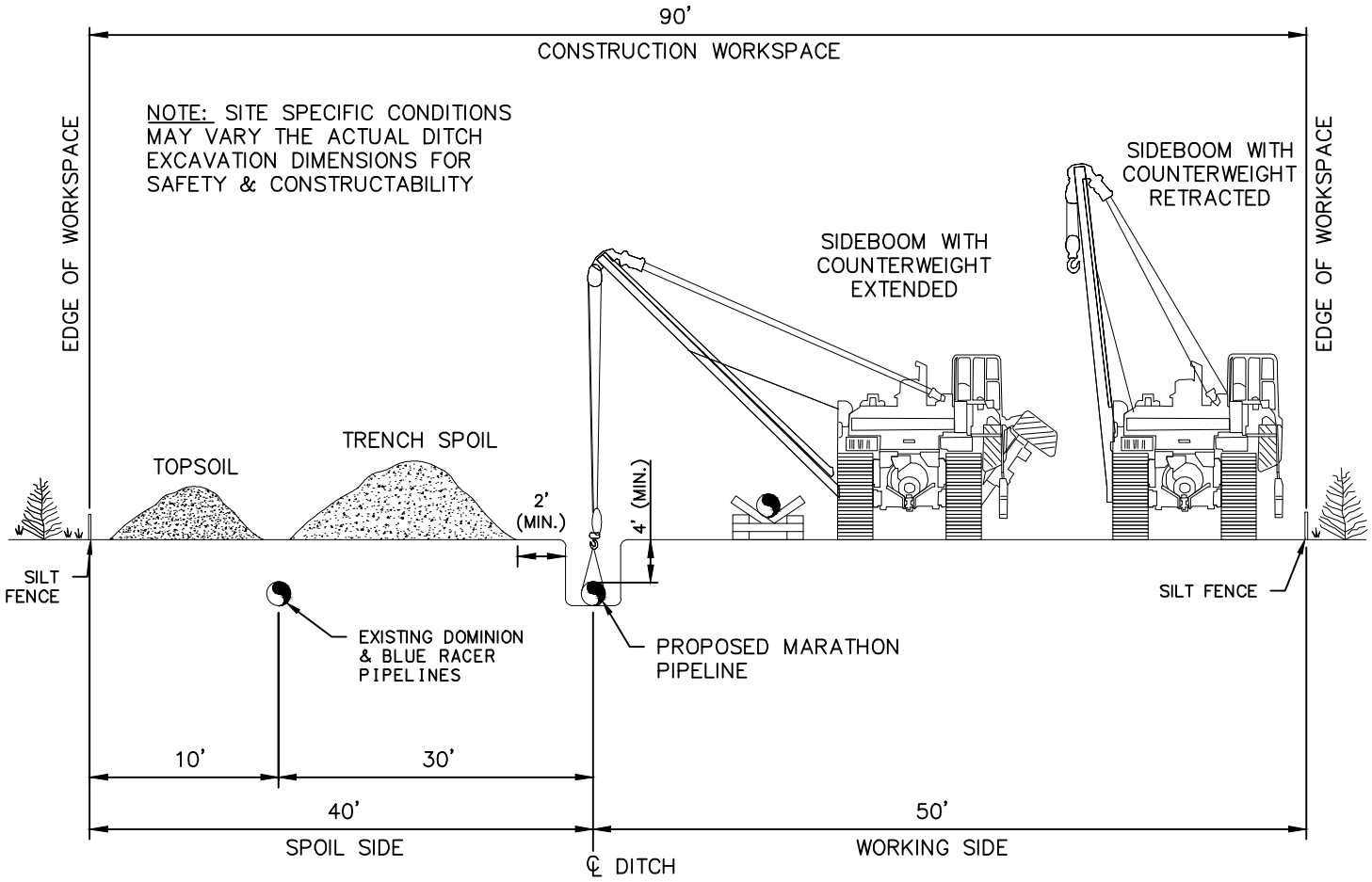

NO.	REVISION DESCRIPTION	BY	DATE	CHK'D	APP'D
		GIE	4-21-15	YA	TT

GULF INTERSTATE ENGINEERING

Marathon Pipe Line LLC

DWN. BY:	GIE	12-03-14
CHK.	JM	12-03-14
PROJ. ENGR.	VH	12-03-14
PROJ. MGR.	TT	12-03-14
CLIENT APP.		
SCALE:	N.T.S.	

PROPOSED CORNERSTONE PIPELINE
TYPICAL CONSTRUCTION
ROW FOR 16" OR LESS DIA. PIPELINE
CO-LOCATED WITH
DOMINION & BLUE RACER PIPELINES

DWG. NO.	SHT. NO.	REV.
1647-100-DG-7521	1 OF 1	

H:_doc\1647\Engineering & Technical\10_Pipeline\Mapping\DWG\Typicals\Environmental Use\1647-100-DG-7521.DWG Plotted on: Apr 21, 2015 - 10:24am by bbrooks

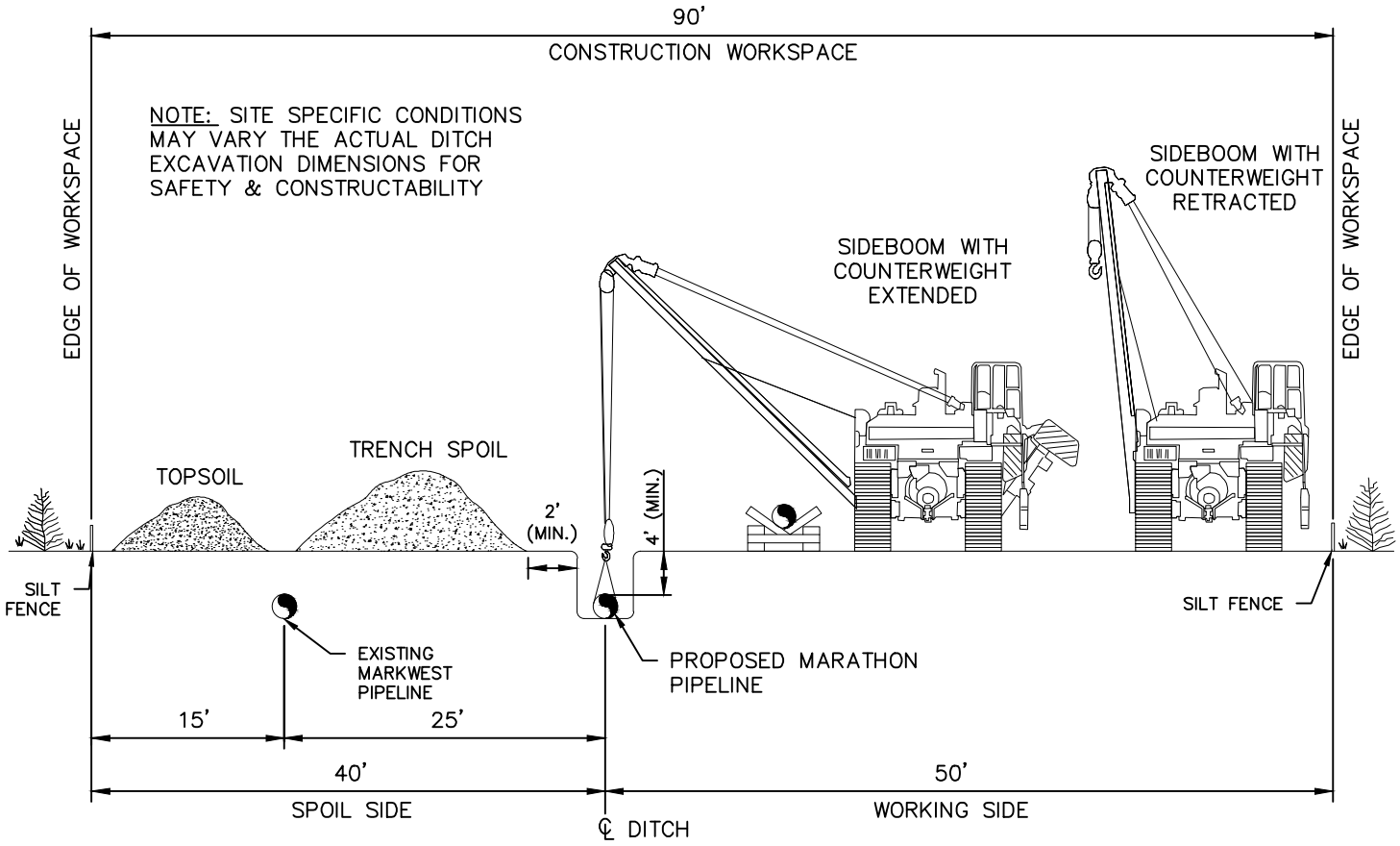

NO.	REVISION DESCRIPTION	BY	DATE	CHK'D	APP'D
		GIE	4-21-15	YA	TT

GULF INTERSTATE ENGINEERING

Marathon Pipe Line LLC

DWN. BY:	GIE	12-03-14
CHK.	JM	12-03-14
PROJ. ENGR.	VH	12-03-14
PROJ. MGR.	TT	12-03-14
CLIENT APP.		
SCALE:	N.T.S.	

PROPOSED CORNERSTONE PIPELINE
TYPICAL CONSTRUCTION
ROW FOR 16" OR LESS DIA. PIPELINE
CO-LOCATED WITH
MARKWEST PIPELINE

DWG. NO.	SHT. NO.	REV.
1647-100-DG-7522	1 OF 1	

H:_doc\1647\Engineering & Technical\10_Pipeline\Mapping\DWG\Typicals\Environmental Use\1647-100-DG-7522.DWG Plotted on: Apr 21, 2015 - 10:26am by bbrooks

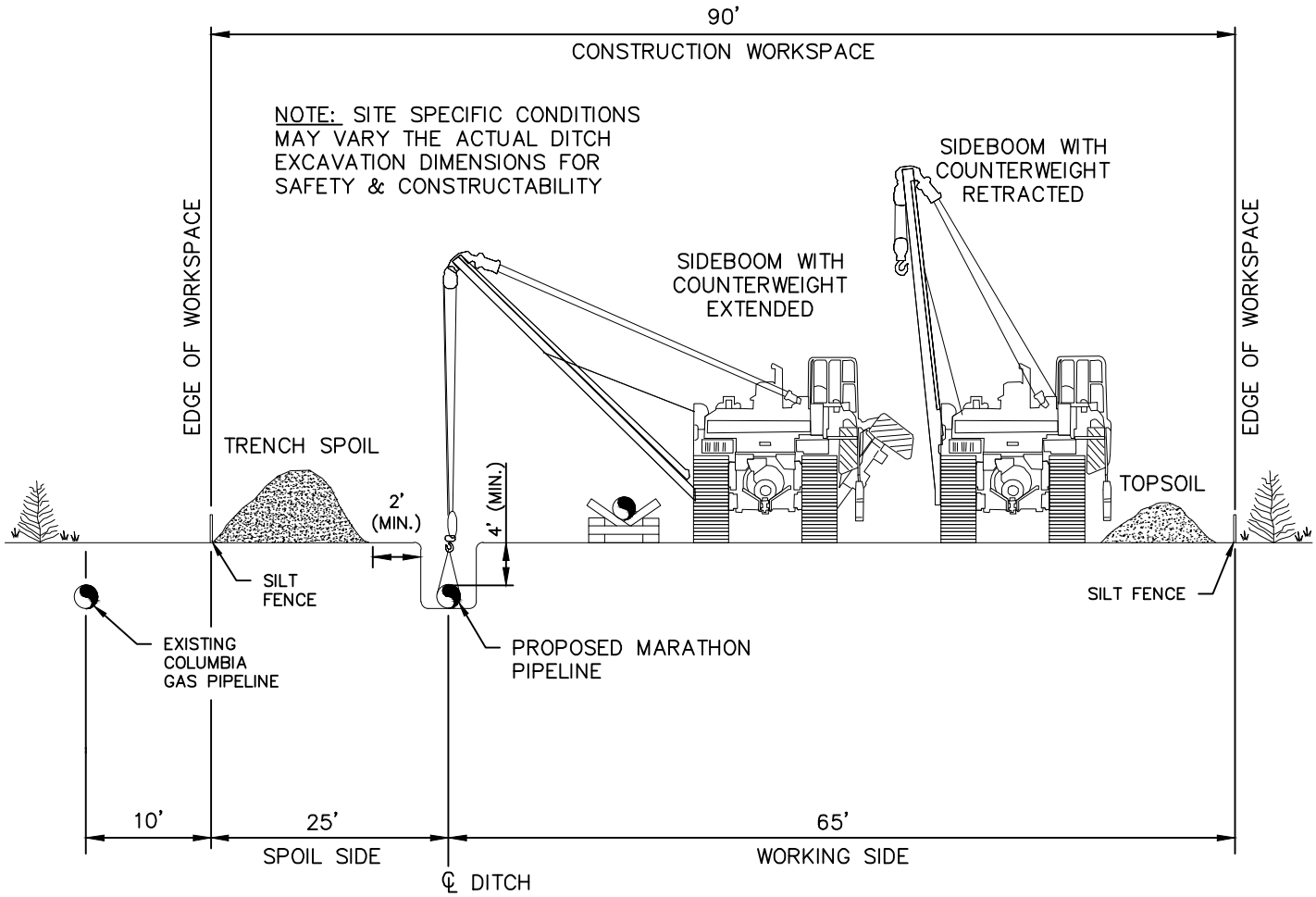

NO.	REVISION DESCRIPTION	BY	DATE	CHK'D	APP'D
		GIE	4-21-15	YA	TT

GULF INTERSTATE ENGINEERING

Marathon Pipe Line LLC

DWN. BY:	GIE	12-03-14
CHK.	JM	12-03-14
PROJ. ENGR.	VH	12-03-14
PROJ. MGR.	TT	12-03-14
CLIENT APP.		
SCALE:	N.T.S.	

PROPOSED CORNERSTONE PIPELINE
TYPICAL CONSTRUCTION
ROW FOR 16" OR LESS DIA. PIPELINE
CO-LOCATED WITH
COLUMBIA GAS PIPELINE

DWG. NO.	SHT. NO.	REV.
1647-100-DG-7523	1 OF 1	

H:_doc\1647\Engineering & Technical\10_Pipeline\Mapping\DWG\Typicals\Environmental Use\1647-100-DG-7523.DWG Plotted on: Apr 21, 2015 - 10:26am by bbrooks

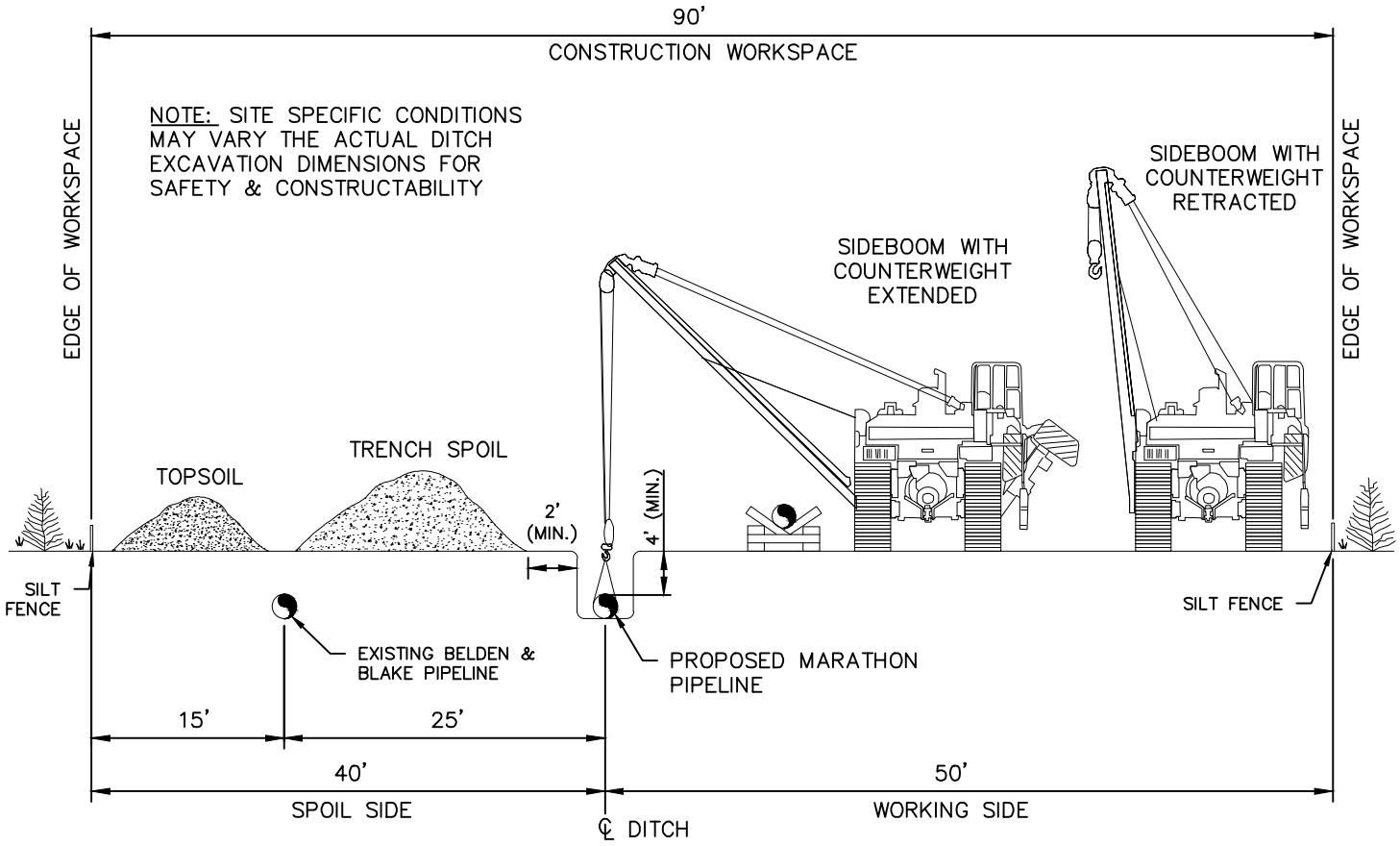

NO.	REVISION DESCRIPTION	BY	DATE	CHK'D	APP'D
		GIE	4-21-15	YA	TT

GULF INTERSTATE ENGINEERING

Marathon Pipe Line LLC

DWN. BY:	GIE	12-03-14
CHK.	JM	12-03-14
PROJ. ENGR.	VH	12-03-14
PROJ. MGR.	TT	12-03-14
CLIENT APP.		
SCALE:	N.T.S.	

PROPOSED CORNERSTONE PIPELINE
TYPICAL CONSTRUCTION
ROW FOR 16" OR LESS DIA. PIPELINE
CO-LOCATED WITH
BELDEN & BLAKE PIPELINE

DWG. NO.	SHT. NO.	REV.
1647-100-DG-7524	1 OF 1	

H:_doc\1647\Engineering & Technical\10_Pipeline\Mapping\DWG\Typicals\Environmental Use\1647-100-DG-7524.DWG Plotted on: Apr 21, 2015 - 10:27am by bbrooks

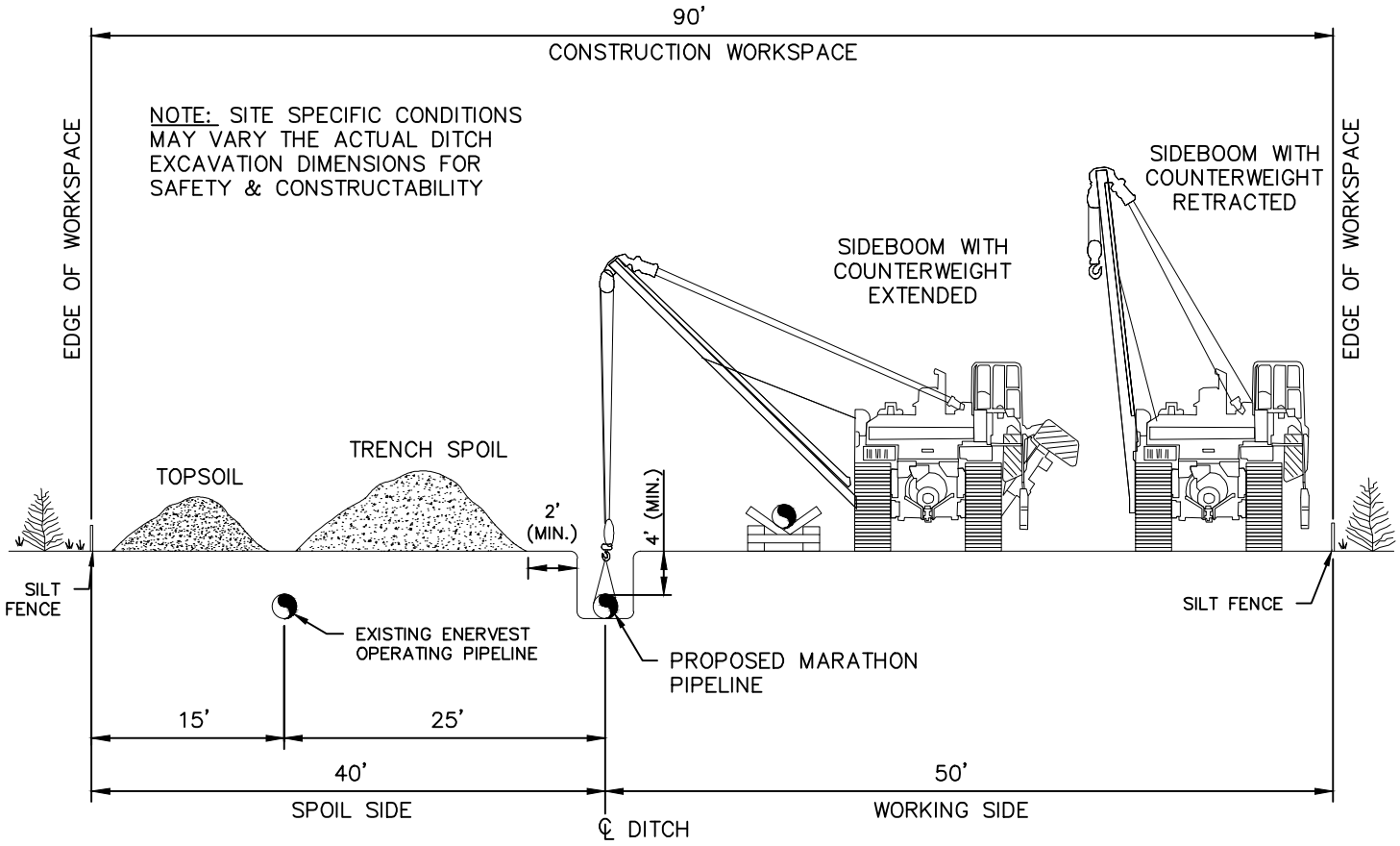

NO.	REVISION DESCRIPTION	BY	DATE	CHK'D	APP'D
		GIE	4-21-15	YA	TT

GULF INTERSTATE ENGINEERING

Marathon Pipe Line LLC

DWN. BY:	GIE	12-03-14
CHK.	JM	12-03-14
PROJ. ENGR.	VH	12-03-14
PROJ. MGR.	TT	12-03-14
CLIENT APP.		
SCALE:	N.T.S.	

PROPOSED CORNERSTONE PIPELINE
TYPICAL CONSTRUCTION
ROW FOR 16" OR LESS DIA. PIPELINE
CO-LOCATED WITH
ENERVEST OPERATING PIPELINE

DWG. NO.	SHT. NO.	REV.
1647-100-DG-7525	1 OF 1	

H:_doc\1647\Engineering & Technical\10_Pipeline\Mapping\DWG\Typicals\Environmental Use\1647-100-DG-7525.DWG Plotted on: Apr 21, 2015 - 10:28am by bbrooks

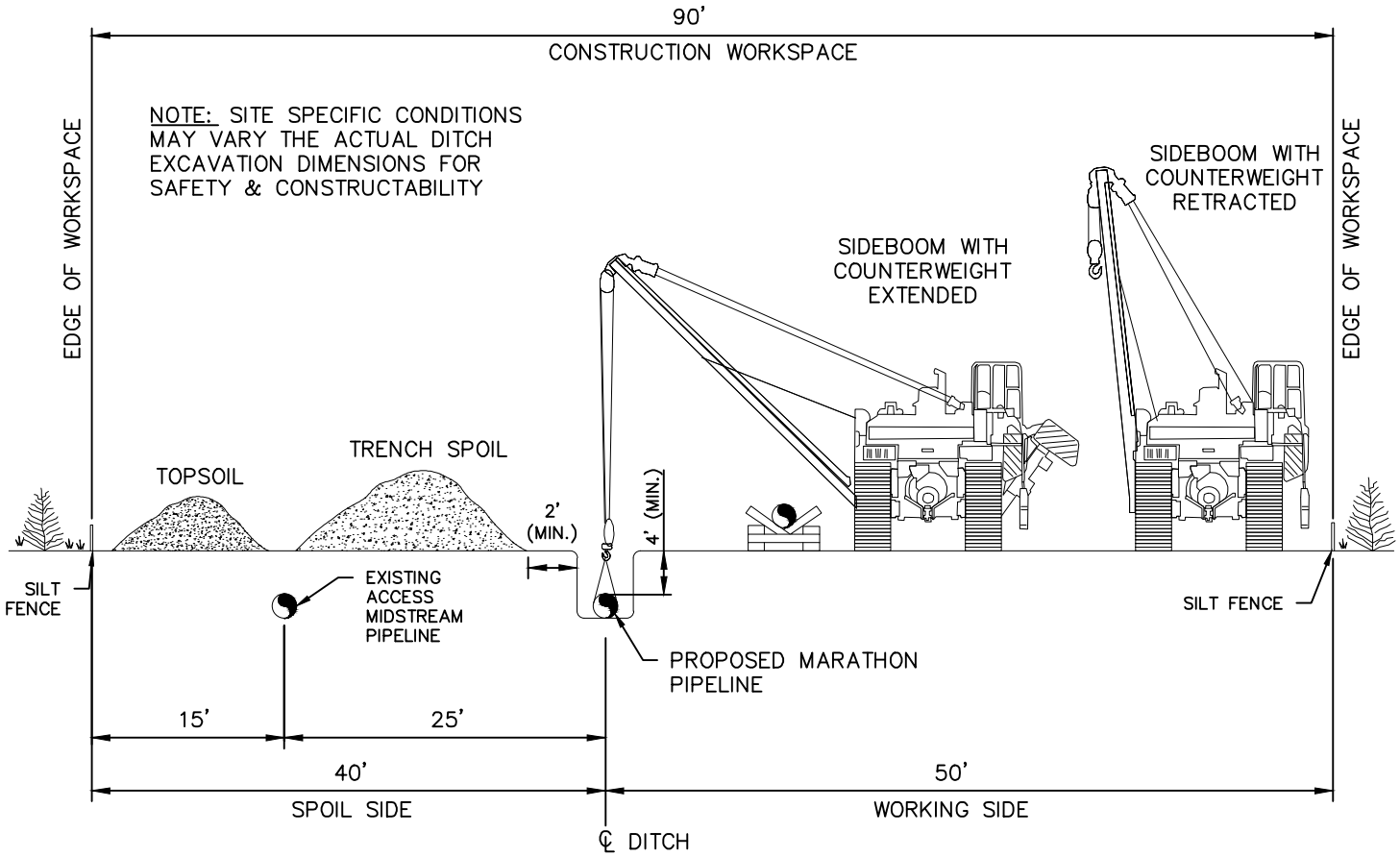

NO.	REVISION DESCRIPTION	BY	DATE	CHK'D	APP'D
		GIE	4-21-15	YA	TT

GULF INTERSTATE ENGINEERING

Marathon Pipe Line LLC

DWN. BY:	GIE	12-03-14
CHK.	JM	12-03-14
PROJ. ENGR.	VH	12-03-14
PROJ. MGR.	TT	12-03-14
CLIENT APP.		
SCALE:	N.T.S.	

PROPOSED CORNERSTONE PIPELINE
TYPICAL CONSTRUCTION
ROW FOR 16" OR LESS DIA. PIPELINE
CO-LOCATED WITH
ACCESS MIDSTREAM PIPELINE

DWG. NO.	SHT. NO.	REV.
1647-100-DG-7527	1 OF 1	

H:_doc\1647\Engineering & Technical\10_Pipeline\Mapping\DWG\Typicals\Environmental Use\1647-100-DG-7527.DWG Plotted on: Apr 21, 2015 - 10:30am by bbrooks

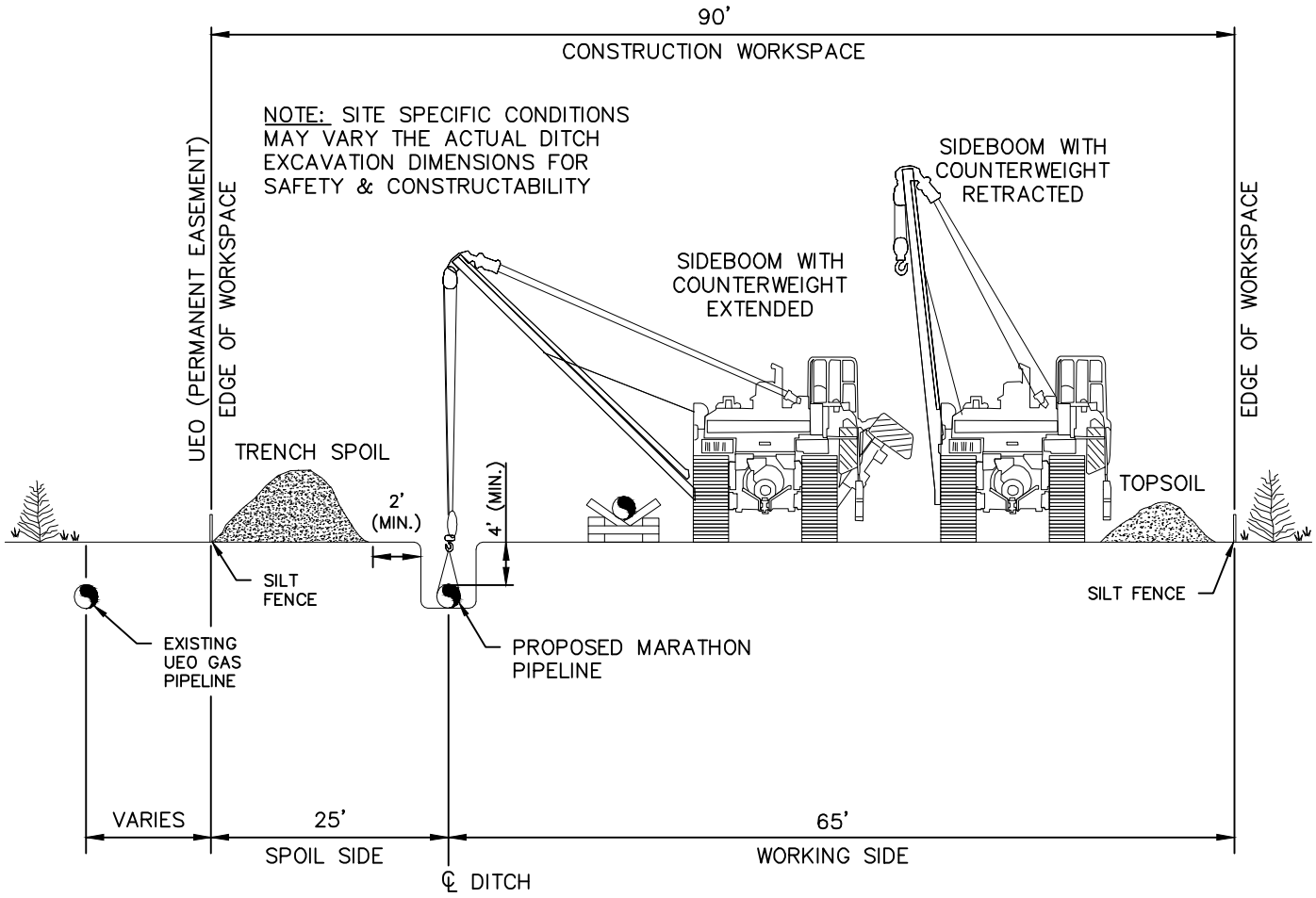

NO.	REVISION DESCRIPTION	BY	DATE	CHK'D	APP'D
		GIE	4-21-15	YA	TT

GULF INTERSTATE ENGINEERING

Marathon Pipe Line LLC

DWN. BY:	GIE	12-03-14
CHK.	JM	12-03-14
PROJ. ENGR.	VH	12-03-14
PROJ. MGR.	TT	12-03-14
CLIENT APP.		
SCALE:	N.T.S.	

PROPOSED CORNERSTONE PIPELINE
TYPICAL CONSTRUCTION
ROW FOR 16" OR LESS DIA. PIPELINE
CO-LOCATED WITH
UEO GAS PIPELINE

DWG. NO.	SHT. NO.	REV.
1647-100-DG-7528	1 OF 1	

H:_doc\1647\Engineering & Technical\10_Pipeline\Mapping\DWG\Typicals\Environmental Use\1647-100-DG-7528.DWG Plotted on: Apr 21, 2015 - 10:31am by bbrooks

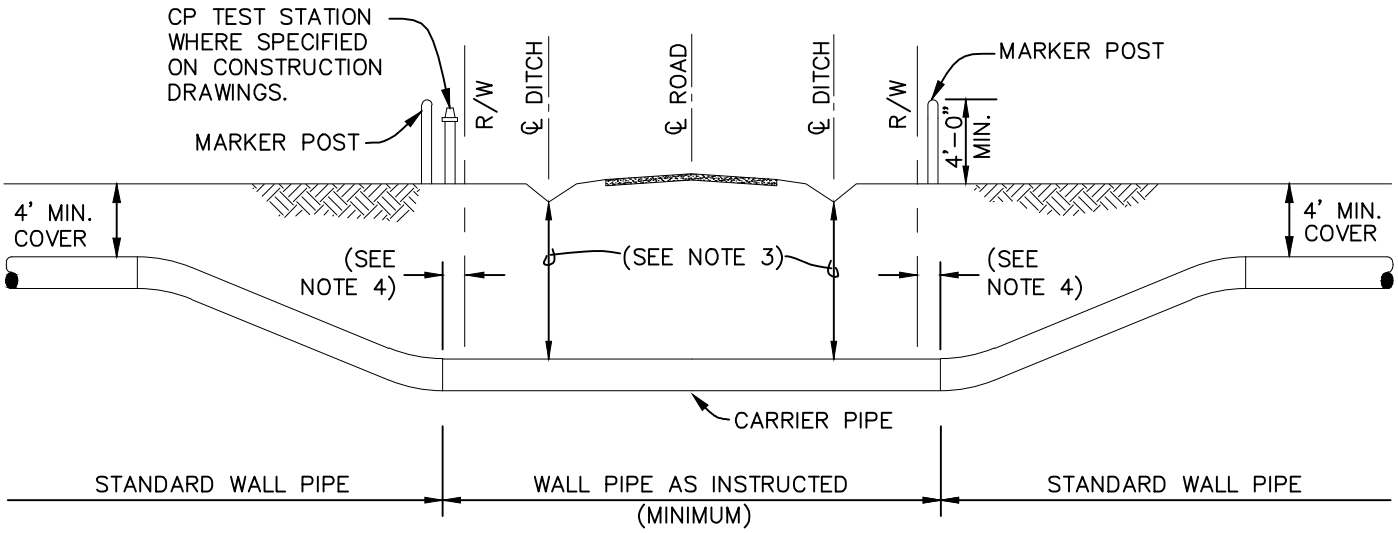

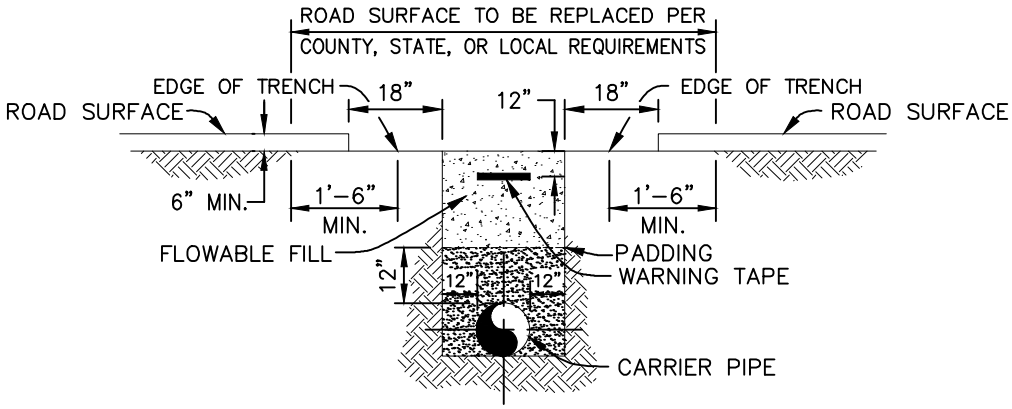

DITCH SECTION

NOTES:

1. CROSSING INSTALLATION SHALL BE IN ACCORDANCE WITH APPLICABLE ROAD PERMIT AND CONTRACT SPECIFICATION REQUIREMENTS.
2. LOCATION, LENGTH OF CROSSING, MATERIAL, AND TESTING REQUIREMENTS SHALL BE AS STATED ON THE ALIGNMENT SHEETS.
3. AS A MINIMUM, THE DEPTH OF COVER UNDER ROAD DITCHES SHALL BE 48" UNLESS OTHERWISE SHOWN ON THE CONSTRUCTION DRAWINGS AND SPECIFIED BY PERMIT.
4. HEAVY WALL PIPE SHALL EXTEND BEYOND THE LIMITS OF THE ROAD RIGHT-OF-WAY ON EACH SIDE OF THE ROAD BY A MINIMUM OF 2-FEET, PER MARATHON STANDARD STDC003.
5. ROAD RECONSTRUCTION SHALL BE AS SHOWN IN THE CONSTRUCTION DRAWINGS.
6. USE FLOWABLE FILL ON TOP OF PADDING UNTIL ROAD SURFACE GRADE IS REACHED.

NO.	REVISION DESCRIPTION	BY	DATE	CHK'D	APP'D
		GIE	4-21-15	CN	TT

GULF INTERSTATE ENGINEERING

DWN. BY:	GIE	5-30-14
CHK.	JM	5-30-14
PROJ. ENGR.	VH	5-30-14
PROJ. MGR.	TT	5-30-14
CLIENT APP.		
SCALE:	N.T.S.	

Marathon Pipe Line LLC

PROPOSED CORNERSTONE PIPELINE

TYPICAL OPEN CUT ROAD CROSSING

DWG. NO. 1647-100-DG-7531 | SHT. NO. 1 OF 1 | REV.

H:_doc\1647\Engineering & Technical\10_Pipeline\Mapping\DWG\Typicals\Environmental Use\1647-100-DG-7531.DWG Plotted on: Apr 21, 2015 - 10:33am by bbrooks

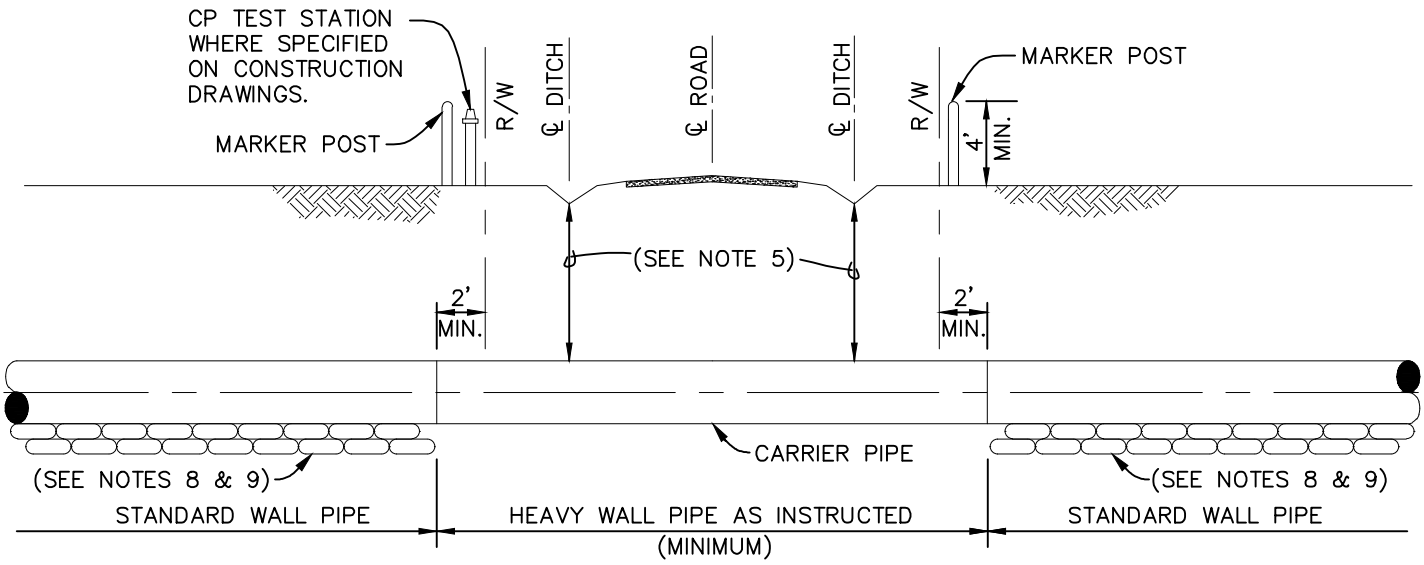

NOTES:

1. INSTALL PIPELINE WARNING SIGN ON EACH SIDE OF CROSSING AT FENCE OR R.O.W. LINE AND CATHODIC PROTECTION TEST STATIONS.CROSSING INSTALLATION SHALL BE IN ACCORDANCE WITH APPLICABLE ROAD PERMIT REQUIREMENTS.
2. CROSSING INSTALLATION SHALL BE IN ACCORDANCE WITH APPLICABLE ROAD PERMIT REQUIREMENTS.
3. WHEN CROSSING PUBLIC ROADS WITH EQUIPMENT, THE ROAD SURFACE SHALL BE ADEQUATELY PROTECTED WITH PADDING SUCH AS TIMBER MATS OR RUBBER TIRES (SEE DWG. 1647-100-DG-7581).
4. LOCATION, LENGTH OF CROSSING, MATERIAL, AND TESTING REQUIREMENTS SHALL BE AS STATED ON THE ALIGNMENT SHEETS. NO VERTICAL BENDS SHALL BE MADE WITHIN ROAD R.O.W.
5. AS A MINIMUM, THE DEPTH OF COVER UNDER ROAD DITCHES SHALL BE 48" UNLESS OTHERWISE SHOWN ON ALIGNMENT SHEETS AND SPECIFIED BY PERMIT.
6. CROSSING PIPE SHALL EXTEND BEYOND THE LIMITS OF THE ROAD RIGHT-OF-WAY ON EACH SIDE OF THE ROAD BY A MINIMUM OF 2 FEET.
7. BORED PIPE SHALL BE DUAL COATED FBE WITH ARO.
8. CONTRACTOR SHALL FIRMLY SUPPORT HEAVY WALL AND LINE PIPE WITH CONTINUOUS SUPPORT MATERIALS. SUPPORT MATERIAL SHALL EXTEND FROM END OF BORE HOLE UNTIL PIPE RESTS ON UNDISTURBED GROUND.
9. SUPPORT MATERIAL TO BE NON-ORGANIC SACKS FILLED WITH SAND, WITH ROCK SHIELD OR EQUAL PLACED BETWEEN CARRIER PIPE AND SAND BAGS AS DIRECTED.

NO.	REVISION DESCRIPTION	BY	DATE	CHK'D	APP'D
		GIE	4-21-15	CN	TT

GULF INTERSTATE ENGINEERING

DWN. BY:	GIE	6-12-14
CHK.	JM	6-12-14
PROJ. ENGR.	VH	6-12-14
PROJ. MGR.	TT	6-12-14
CLIENT APP.		
SCALE:	N.T.S.	

Marathon Pipe Line LLC

PROPOSED CORNERSTONE PIPELINE

TYPICAL UNCASED SLICK BORE ROAD CROSSING WITH SUPPORT

DWG. NO. 1647-100-DG-7532 | SHT. NO. 1 OF 1 | REV.

H:_doc\1647\Engineering & Technical\10_Pipeline\Mapping\DWG\Typicals\Environmental Use\1647-100-DG-7532.DWG Plotted on: Apr 21, 2015 - 10:34am by bbrooks

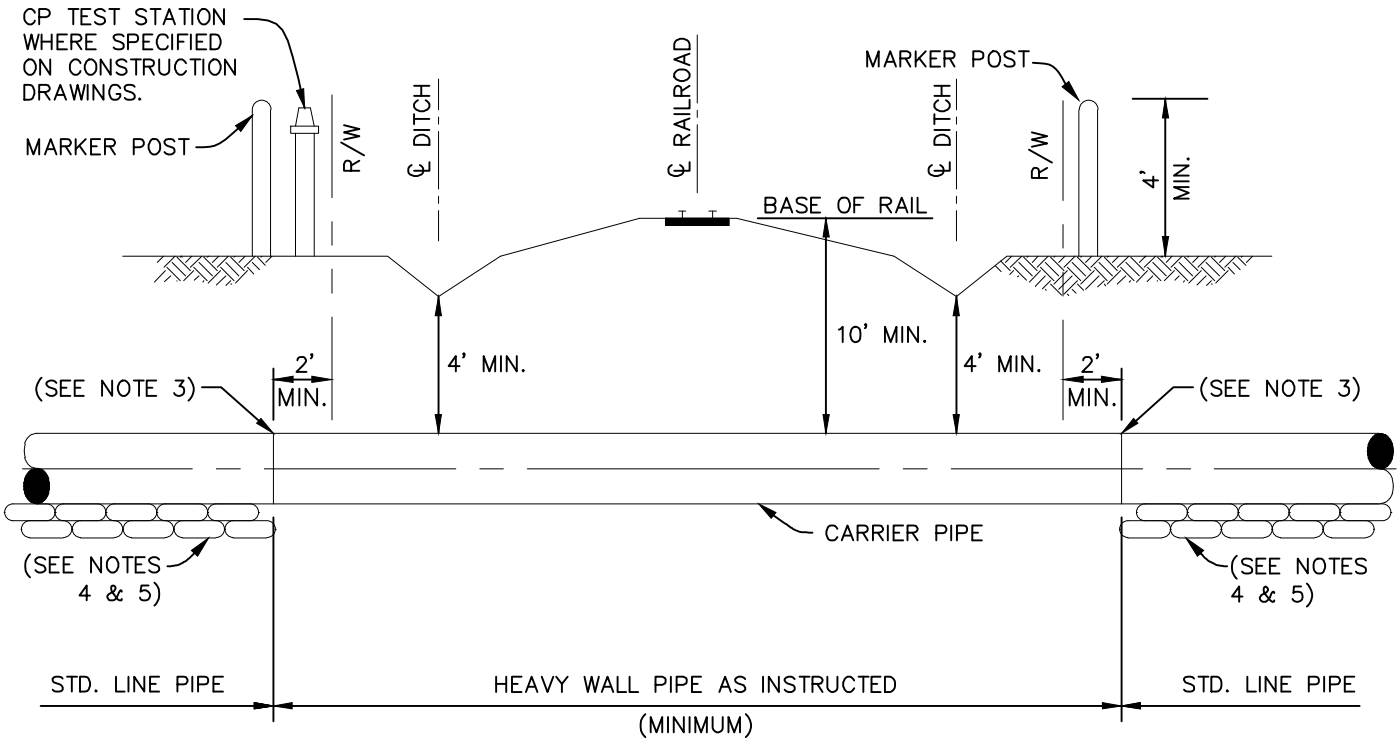

NOTES:

1. CROSSING INSTALLATION SHALL BE IN ACCORDANCE WITH APPLICABLE RAILROAD PERMIT REQUIREMENTS.
2. LOCATION, LENGTH OF CROSSING, MATERIAL, AND TESTING REQUIREMENTS SHALL BE AS STATED ON THE ALIGNMENT SHEETS.
3. HEAVY WALL PIPE SHALL EXTEND BEYOND THE LIMITS OF THE RAILROAD RIGHT-OF-WAY. BORED PIPE SHALL BE DUAL COATED FBE WITH ARO.
4. CONTRACTOR SHALL FIRMLY SUPPORT HEAVY WALL AND LINE PIPE WITH CONTINUOUS SUPPORT MATERIALS. SUPPORT MATERIAL SHALL EXTEND FROM END OF BORE HOLE UNTIL PIPE RESTS ON UNDISTURBED GROUND.
5. SUPPORT MATERIAL TO BE NON-ORGANIC SACKS FILLED WITH SAND, WITH ROCK SHIELD OR EQUAL PLACED BETWEEN CARRIER PIPE AND SAND BAGS AS DIRECTED.

NO.	REVISION DESCRIPTION	BY	DATE	CHK'D	APP'D
		GIE	4-21-15	CN	TT

GULF INTERSTATE ENGINEERING

DWN. BY:	GIE	6-12-14
CHK.	JM	6-12-14
PROJ. ENGR.	VH	6-12-14
PROJ. MGR.	TT	6-12-14
CLIENT APP.		
SCALE:	N.T.S.	

Marathon Pipe Line LLC

PROPOSED CORNERSTONE PIPELINE

TYPICAL UNCASED BORE RAILROAD CROSSING WITH SUPPORT

DWG. NO. 1647-100-DG-7533 | SHT. NO. 1 OF 1 | REV.

H:_doc\1647\Engineering & Technical\10_Pipeline\Mapping\DWG\Typicals\Environmental Use\1647-100-DG-7533.DWG Plotted on: Apr 21, 2015 - 10:34am by bbrooks

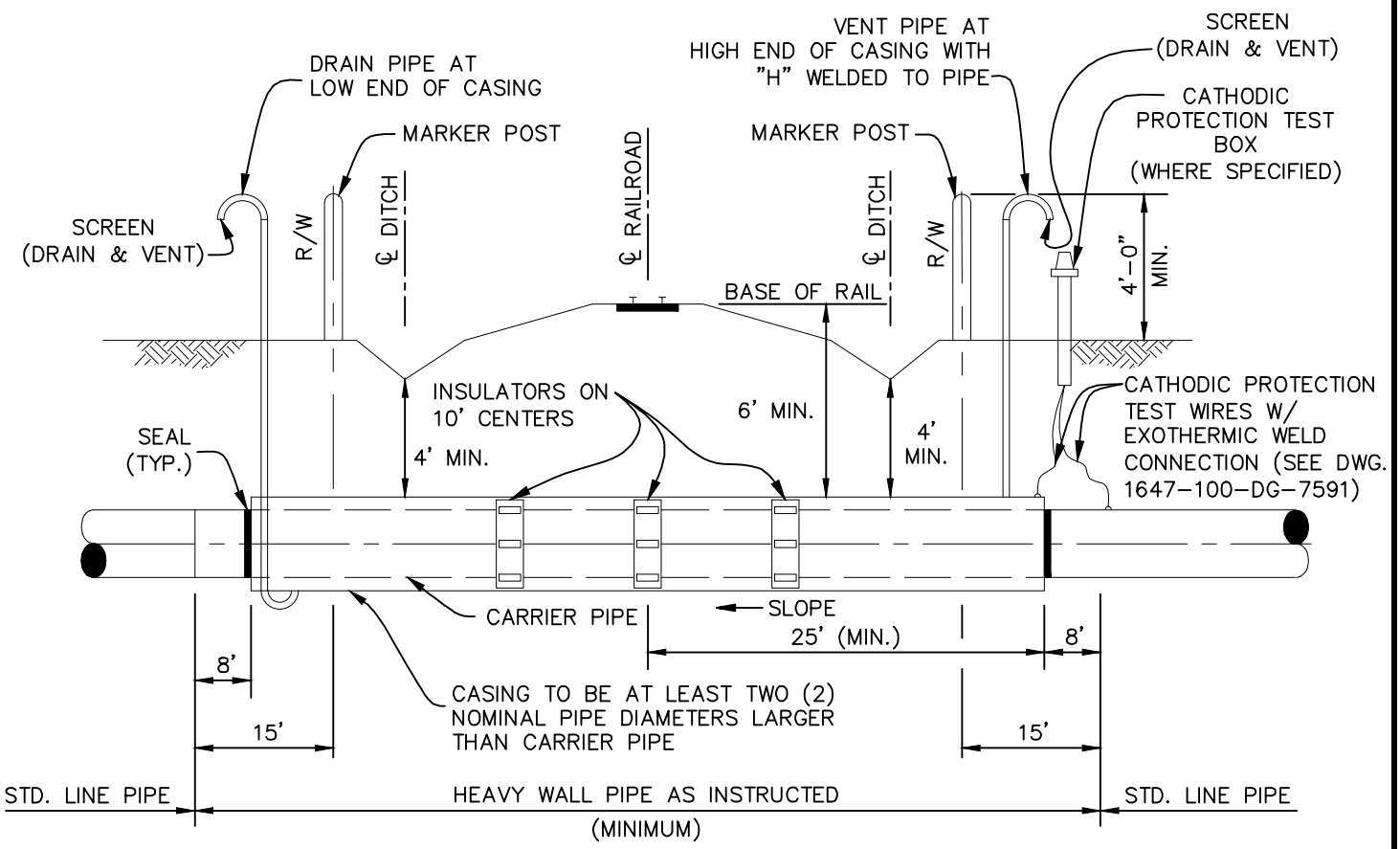

NOTES:

1.) CROSSING INSTALLATION SHALL BE IN ACCORDANCE WITH APPLICABLE RAILROAD PERMIT REQUIREMENTS.

2.) LOCATION, LENGTH OF CROSSING, MATERIAL, AND TESTING REQUIREMENTS SHALL BE AS STATED ON THE ALIGNMENT SHEETS.

3.) AS A MINIMUM, THE DEPTH OF COVER UNDER RAILROAD DITCHES SHALL BE 4' UNLESS OTHERWISE SPECIFIED BY PERMIT REQUIREMENTS FROM LOCAL AUTHORITIES.

4.) CONTRACTOR SHALL FIRMLY SUPPORT HEAVY WALL AND LINE PIPE WITH CONTINUOUS SUPPORT MATERIALS. SUPPORT MATERIAL SHALL EXTEND ACROSS TRANSITION WELD AND EXTEND UNTIL PIPE RESTS ON UNDISTURBED GROUND.

5.) SUPPORT MATERIAL TO BE NON-ORGANIC SACKS FILLED WITH SAND.

6.) CASING VENT/DRAIN PIPES SHALL NOT BE LESS THAN 2" NPS, INSTALLED APPROXIMATELY 1' FROM EDGE OF FACE OF CASING PIPE AND MINIMUM OF 48" ABOVE NATURAL GROUND.

7.) HEAVY WALL PIPE SHALL EXTEND NOT LESS THAN 15' BEYOND THE LIMITS OF THE RAILROAD RIGHT-OF-WAY.

8.) TEST STATION CANNOT BE INSTALLED DIRECTLY OVER CASING.

MINIMUM NOMINAL WALL THICKNESS FOR CASING IN CROSSINGS

	MINIMUM CASING NOMINAL WALL THICKNESS (INCHES)	
CARRIER PIPE NOMINAL DIAMETER (INCHES)	RAILROAD	HIGHWAY
14 AND UNDER	0.188	0.134
16	0.219	0.134

NO.	REVISION DESCRIPTION	BY	DATE	CHK'D	APP'D
		GIE	4-21-15	CN	TT

GULF INTERSTATE ENGINEERING

Marathon Pipe Line LLC

DWN. BY:	GIE	6-12-14
CHK.	JM	6-12-14
PROJ. ENGR.	VH	6-12-14
PROJ. MGR.	TT	6-12-14
CLIENT APP.		
SCALE:	N.T.S.	

PROPOSED CORNERSTONE PIPELINE

TYPICAL CASED BORED RAILROAD CROSSING

DWG. NO. 1647-100-DG-7534 | SHT. NO. 1 OF 1 | REV.

H:_doc\1647\Engineering & Technical\10_Pipeline\Mapping\DWG\Typicals\Environmental Use\1647-100-DG-7534.DWG Plotted on: Apr 21, 2015 - 10:35am by bbrooks

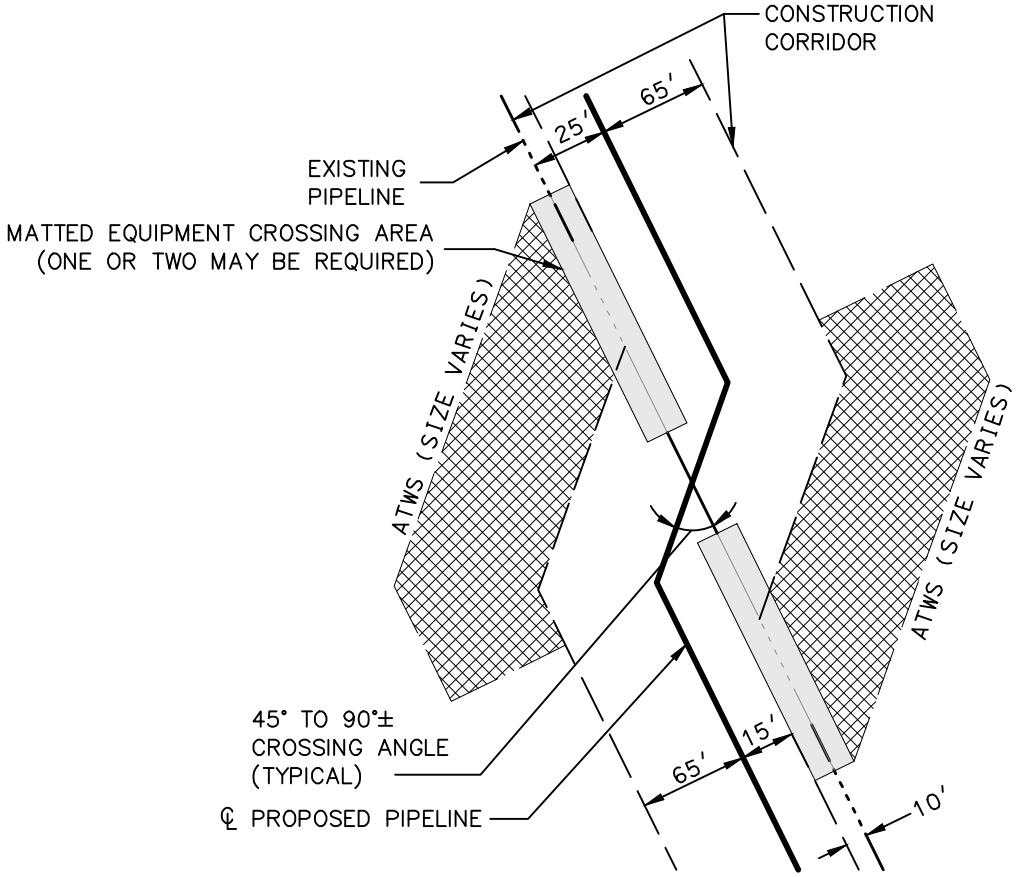

PLAN

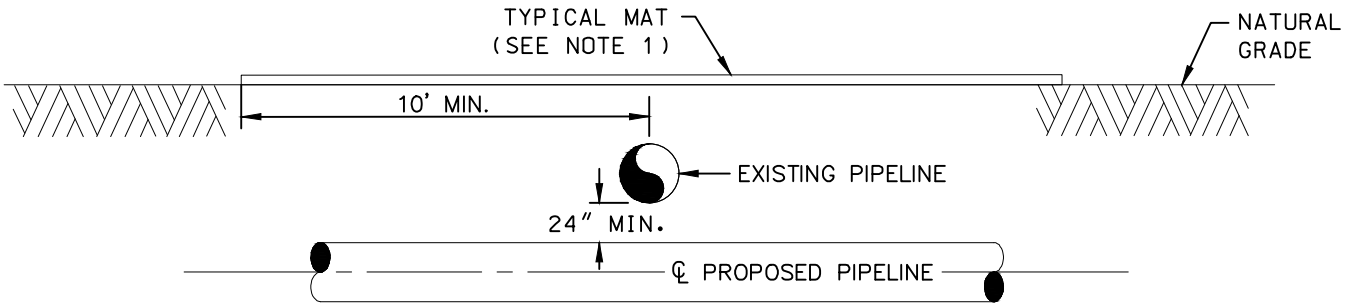

ELEVATION

NOTES:

1. MATS MUST BE CENTERED ON AND PERPENDICULAR TO THE EXISTING PIPELINE AS REQUIRED BY PERMIT.

NO.	REVISION DESCRIPTION	BY	DATE	CHK'D	APP'D
		GIE	4-21-15	CN	TT

GULF INTERSTATE ENGINEERING

DWN. BY:	GIE	6-12-14
CHK.	JM	6-12-14
PROJ. ENGR.	VH	6-12-14
PROJ. MGR.	TT	6-12-14
CLIENT APP.		
SCALE:	N.T.S.	

Marathon Pipe Line LLC

PROPOSED CORNERSTONE PIPELINE

TYPICAL EXISTING PARALLEL PIPELINE CROSSING

DWG. NO.	SHT. NO.	REV.
1647-100-DG-7535	1 OF 1	

H:_doc\1647\Engineering & Technical\10_Pipeline\Mapping\DWG\Typicals\Environmental Use\1647-100-DG-7535.DWG Plotted on: Apr 21, 2015 - 10:36am by bbrooks

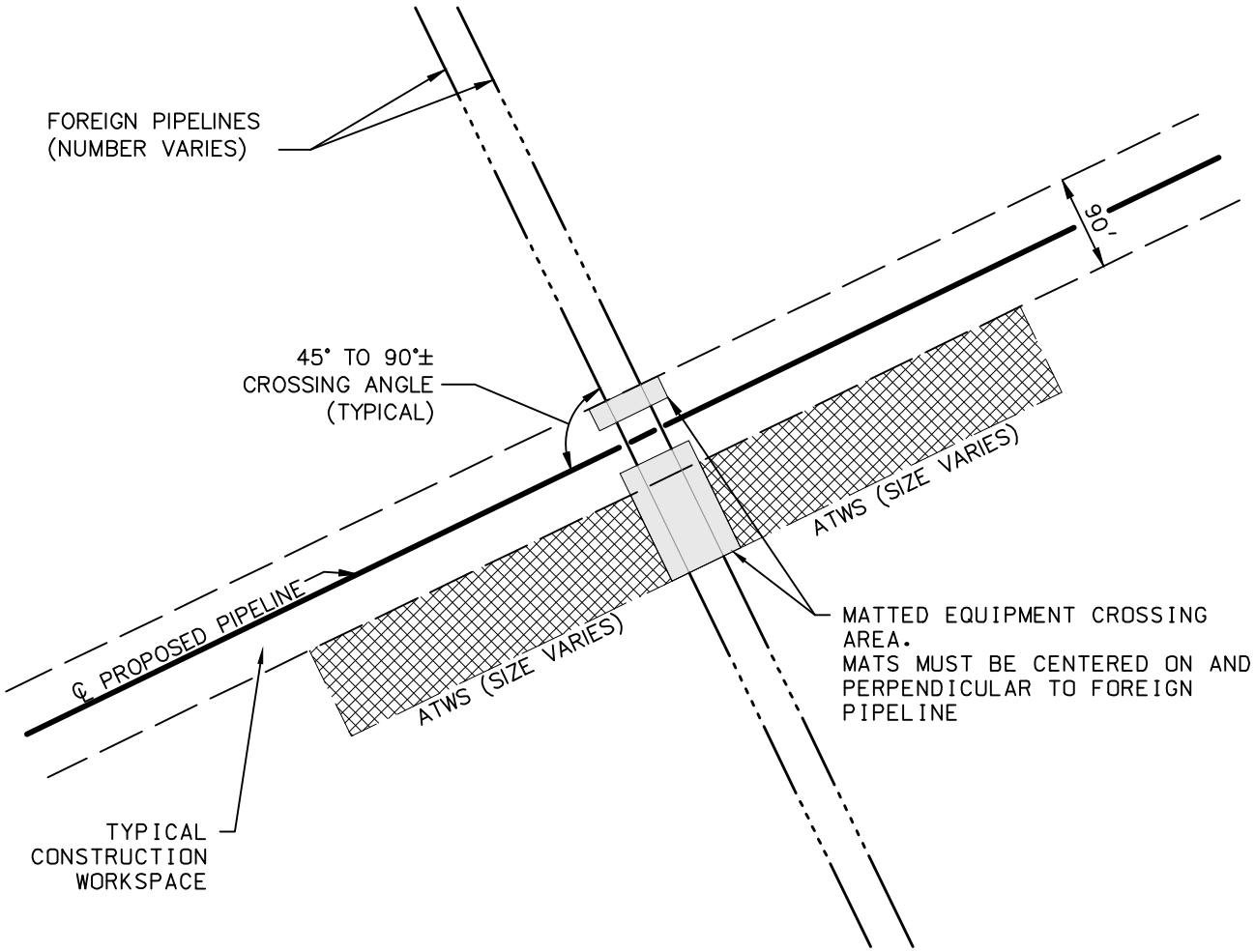

PLAN

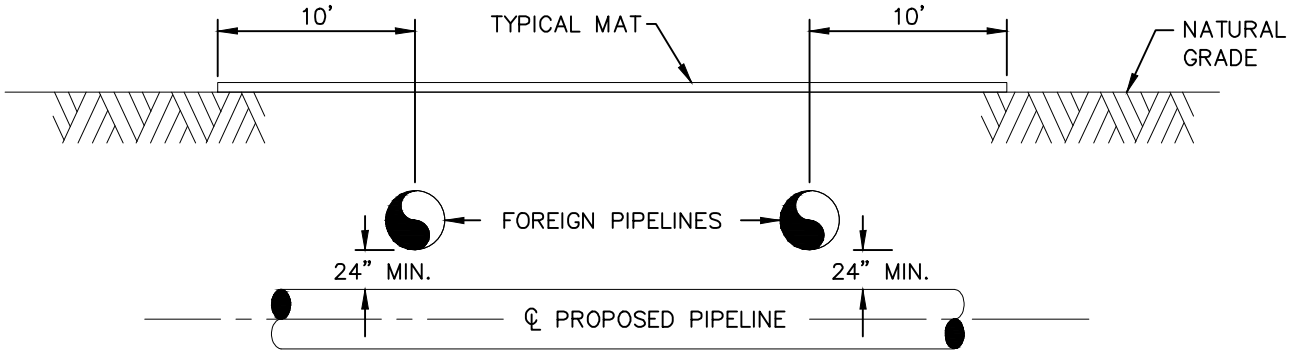

ELEVATION

NO.	REVISION DESCRIPTION	BY	DATE	CHK'D	APP'D
		GIE	4-21-15	CN	TT

GULF INTERSTATE ENGINEERING

Marathon Pipe Line LLC

DWN. BY:	GIE	6-12-14
CHK.	JM	6-12-14
PROJ. ENGR.	VH	6-12-14
PROJ. MGR.	TT	6-12-14
CLIENT APP.		
SCALE:	N.T.S.	

PROPOSED CORNERSTONE PIPELINE

TYPICAL FOREIGN PIPELINE CROSSING

DWG. NO.	SHT. NO.	REV.
1647-100-DG-7536	1 OF 1	

H:_doc\1647\Engineering & Technical\10_Pipeline\Mapping\DWG\Typicals\Environmental Use\1647-100-DG-7536.DWG Plotted on: Apr 21, 2015 - 10:37am by bbrooks

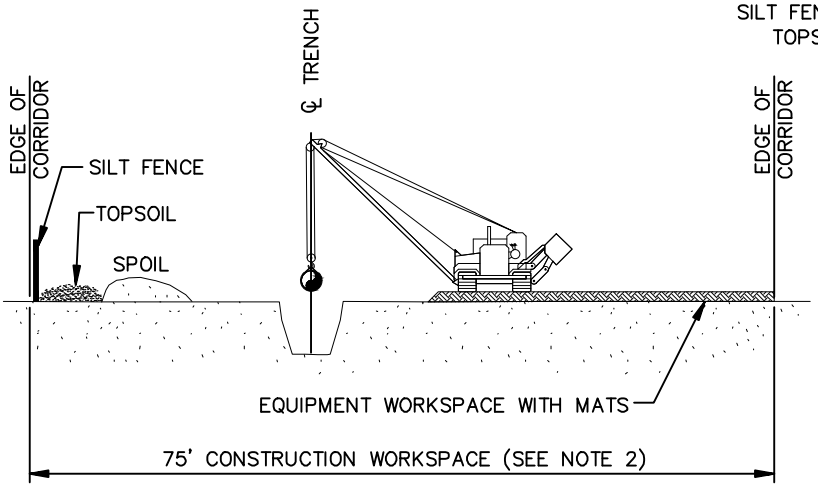

CROSS SECTION

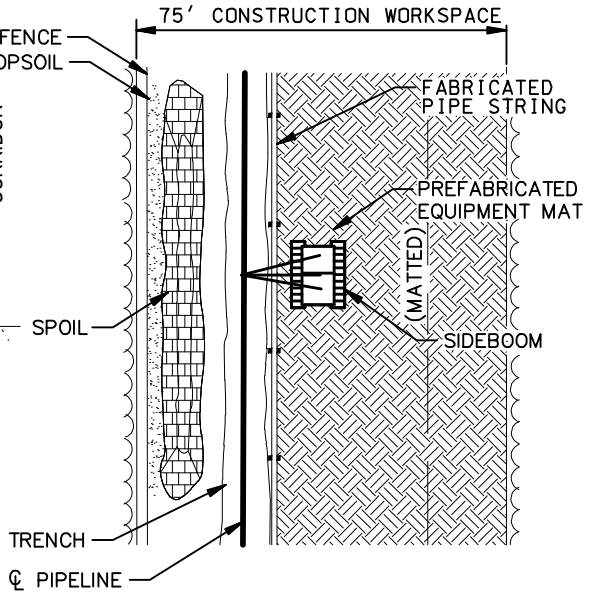

PLAN VIEW

CONSTRUCTION PROCEDURE NOTES:

1. FLAG WETLAND BOUNDARIES PRIOR TO CLEARING.
2. CONSTRUCTION WORKSPACE NARROWED TO 75' WIDTH MAXIMUM IN ALL WETLANDS AND STREAMS.
3. REFUEL STATIONARY EQUIPMENT 100 FEET AWAY FROM WETLAND OR STREAM BOUNDARIES.
4. INSTALL TEMPORARY SLOPE BREAKER UP SLOPE AS DIRECTED BY THE ENVIRONMENTAL INSPECTOR OR OTHER QUALIFIED PROFESSIONAL.
5. AVOID IMPACT AND/OR DISTURBANCE TO ADJACENT WETLANDS. INSTALL SEDIMENT BARRIERS (SILT FENCE) AT DOWN SLOPE EDGE OF ROW AND ALONG WETLAND EDGE AS REQUIRED.
6. RESTRICT ROOT GRUBBING TO ONLY THAT AREA OVER THE DITCHLINE.
7. TOPSOIL STRIPPING IS REQUIRED IN SATURATED SOIL CONDITIONS EXCEPT WHERE AND AS ALLOWED BY THE ENVIRONMENTAL INSPECTOR OR OTHER QUALIFIED PROFESSIONAL.
8. LEAVE TRENCH PLUGS AT THE EDGE OF SATURATED WETLANDS UNTIL JUST PRIOR TO TRENCHING.
9. INSTALL TIMBER MATS FOR EQUIPMENT CROSSINGS THROUGH ENTIRE WETLAND AREA.
10. TRENCH THROUGH WETLANDS. PLACE SPOIL TO ALLOW FOR PROPER SURFACE DRAINAGE.
11. PIPE SECTION MAY BE FABRICATED WITHIN THE WETLAND AND ADJACENT TO ALIGNMENT, OR IN STAGING AREA OUTSIDE THE WETLAND AND WALKED IN WHERE AND AS APPROVED BY THE ENVIRONMENTAL INSPECTOR OR OTHER QUALIFIED PROFESSIONAL.
12. LOWER-IN PIPE, INSTALL PERMANENT TRENCH PLUGS AT WETLAND EDGES AND BACKFILL IMMEDIATELY.
13. REMOVE ANY TIMBER MATS OR PREFABRICATED MATS FROM WETLANDS UPON COMPLETION.
14. RESTORE GRADE TO NEAR PRE-CONSTRUCTION TOPOGRAPHY, REPLACE TOPSOIL AND INSTALL PERMANENT EROSION CONTROL.

NO.	REVISION DESCRIPTION	BY	DATE	CHK'D	APP'D
		GIE	4-21-15	YA	TT

GULF INTERSTATE ENGINEERING

DWN. BY:	GIE	6-12-14
CHK.	JM	6-12-14
PROJ. ENGR.	VH	6-12-14
PROJ. MGR.	TT	6-12-14
CLIENT APP.		
SCALE:	N.T.S.	

Marathon Pipe Line LLC

PROPOSED CORNERSTONE PIPELINE

TYPICAL WETLAND CROSSING

DWG. NO.	SHT. NO.	REV.
1647-100-DG-7541	1 OF 1	

H:_doc\1647\Engineering & Technical\10_Pipeline\Mapping\DWG\Typicals\Environmental Use\1647-100-DG-7541-Environmental 20150421.DWG Plotted on: Apr 21, 2015 - 10:38am by bbrooks

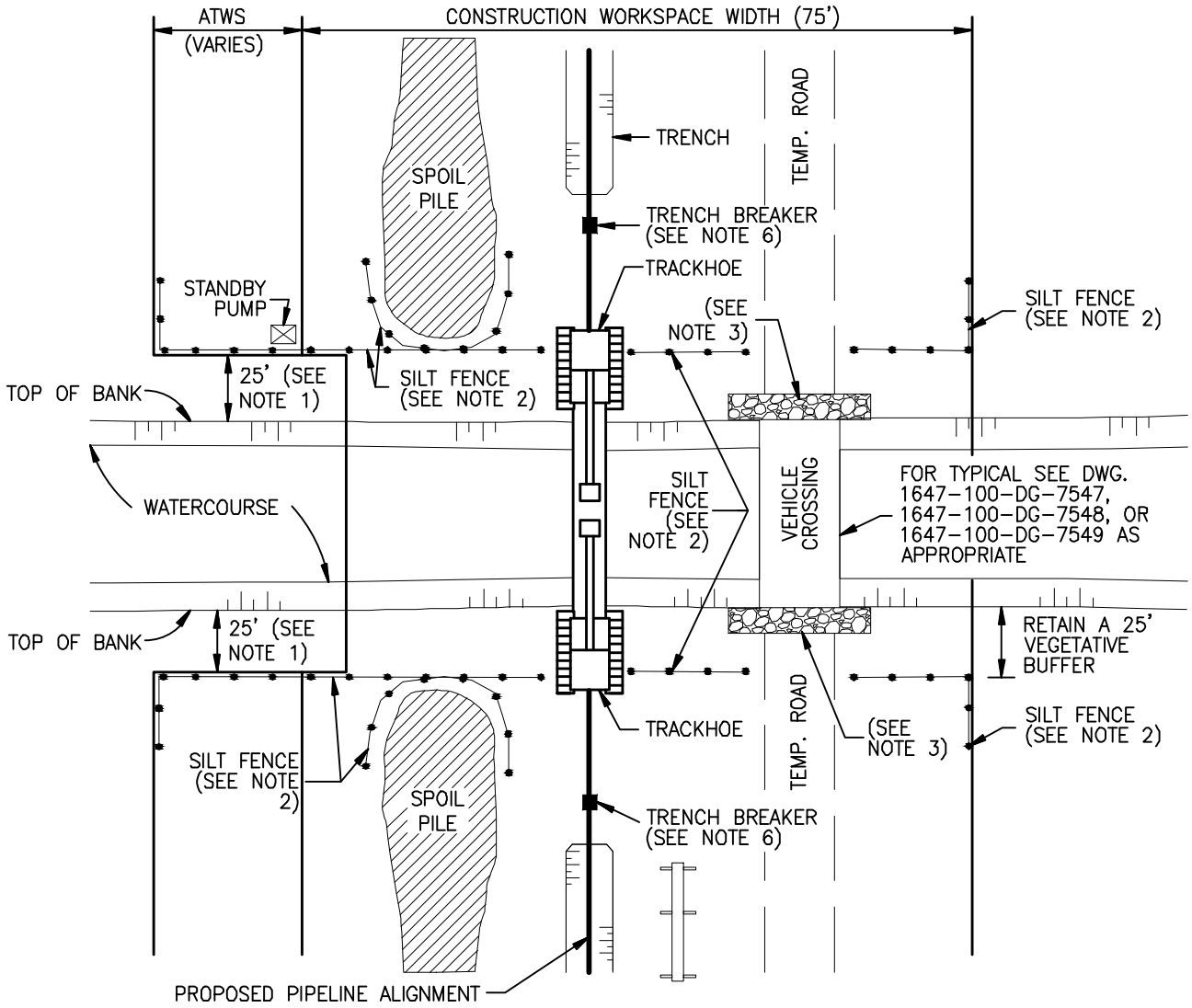

PLAN VIEW

NOTES:

1. THE TYPICAL SET BACK FOR WORKSPACE IS 25' FROM TOP OF BANK; HOWEVER, SHOULD CONSTRUCTABILITY ISSUES REQUIRE THE SET BACK TO BE REDUCED, THE MINIMUM SET BACK WOULD THEN BE 15' AS APPROVED BY THE ENVIRONMENTAL INSPECTOR.
2. THE TYPICAL SET BACK FOR SPOIL PILE IS 25' FROM THE TOP OF BANK. THIS MATERIAL MUST BE CONTAINED AND SURROUNDED BY SILT FENCE PROTECTION TO PREVENT SATURATED SOIL FROM FLOWING BACK INTO THE WATERCOURSE.
3. CONSTRUCT 2' (MIN) WIDE X 1' (MIN) DEEP TRENCH THAT EXTENDS A MINIMUM OF 2' BEYOND BOTH SIDES OF VEHICLE CROSSING OPENING AND FILL WITH 6" STONE TO BE USED AS A SEDIMENT FILTER TRAP. GEOTEXTILE FABRIC MAY BE USED UNDER THE ROCK.
4. SCHEDULE CONSTRUCTION DURING LOW FLOW PERIOD TO THE MAXIMUM EXTENT POSSIBLE.
5. EXCAVATE TRENCH THROUGH PLUGS. WORK IS TO BE COMPLETED AS QUICKLY AS POSSIBLE.
   A. LOWER IN PIPE AND BACKFILL IMMEDIATELY WITH SPOIL MATERIAL.
   B. IF THE SPOIL MATERIAL IS NOT SUITABLE, USE IMPORTED CLEAN GRANULAR MATERIAL.
   C. IF BLASTING IS REQUIRED, USE CONTROLLED BLASTING TECHNIQUES TO PREVENT DAMAGE TO THE FLOW CONVEYANCE SYSTEM. ALTERNATIVELY, BLASTING MAY BE ACCOMPLISHED PRIOR TO CONSTRUCTING THE CROSSING.
6. TRENCH BREAKERS TO BE INSTALLED AT TOP OF BANKS WITH TWO ADDITIONAL TRENCH BREAKERS UPSTREAM AND DOWNSTREAM OF THE CROSSING AT 30' INTERVALS OR AS DIRECTED BY ENVIRONMENTAL INSPECTOR OR OTHER QUALIFIED COMPANY PERSONNEL.
7. DEPTH TO THE TOP OF THE INSTALLED PIPE LOCATED WITHIN STREAMS WILL BE A MINIMUM OF 48 INCHES IN NON-BEDROCK BOTTOM STREAMS AND A MINIMUM OF 18 INCHES IN BEDROCK BOTTOM STREAMS.

NO.	REVISION DESCRIPTION	BY	DATE	CHK'D	APP'D
		GIE	5-19-15	YA	TT

GULF INTERSTATE ENGINEERING

Marathon Pipe Line LLC

DWN. BY:	GIE	6-12-14
CHK.	JM	6-12-14
PROJ. ENGR.	VH	6-12-14
PROJ. MGR.	TT	6-12-14
CLIENT APP.		
SCALE:	N.T.S.	

PROPOSED CORNERSTONE PIPELINE

TYPICAL OPEN CUT
WET WATERBODY CROSSING

DWG. NO.	SHT. NO.	REV.
1647-100-DG-7542	1 OF 1	

H:_doc\1647\Engineering & Technical\10_Pipeline\Mapping\DWG\Typicals\Environmental Use\1647-100-DG-7542-Environmental 20150421.DWG Plotted on: May 19, 2015 - 1:08pm by jmatias

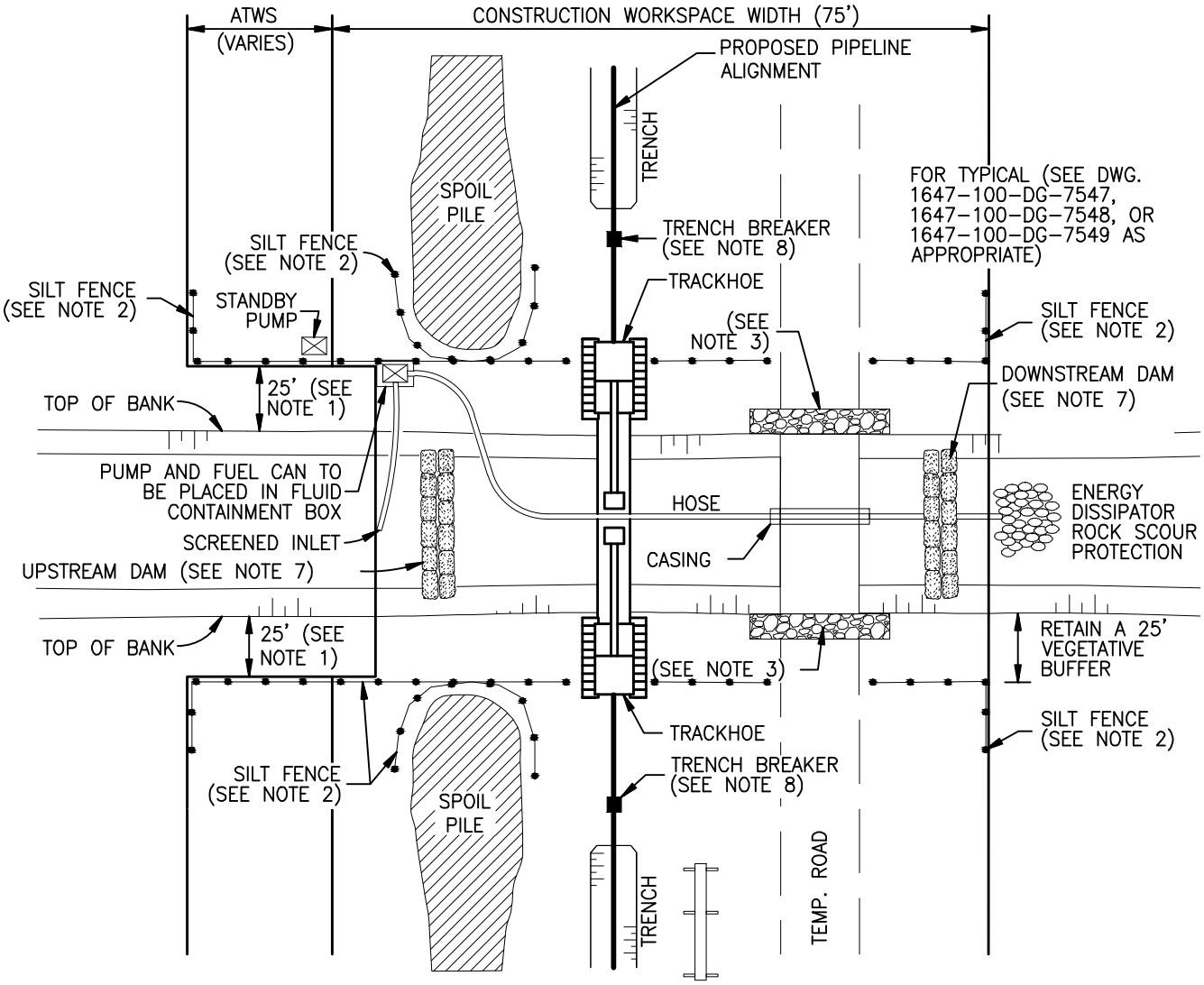

PLAN VIEW

* SEE DWG. 1647-100-DG-7543 SHT. 2 OF 2 FOR NOTES

NO.	REVISION DESCRIPTION	BY	DATE	CHK'D	APP'D
		GIE	5-15-15	YA	TT

GULF INTERSTATE ENGINEERING

DWN. BY:	GIE	6-12-14
CHK.	JM	6-12-14
PROJ. ENGR.	VH	6-12-14
PROJ. MGR.	TT	6-12-14
CLIENT APP.		
SCALE:	N.T.S.	

Marathon Pipe Line LLC

PROPOSED CORNERSTONE PIPELINE

TYPICAL DAM AND PUMP "DRY" STREAM CROSSING

DWG. NO.	SHT. NO.	REV.
1647-100-DG-7543	1 OF 2	

H:_doc\1647\Engineering & Technical\10_Pipeline\Mapping\DWG\Typicals\Environmental Use\1647-100-DG-7543-01-Environmental 20150421.DWG Plotted on: May 15, 2015 - 12:08pm by jmatias

DAM AND PUMP "DRY" STREAM CROSSING NOTES:

1. THE TYPICAL SET BACK FOR WORKSPACE IS 25' FROM TOP OF BANK; HOWEVER, SHOULD CONSTRUCTABILITY ISSUES REQUIRE THE SET BACK TO BE REDUCED, THE MINIMUM SET BACK WOULD THEN BE 15' AS APPROVED BY THE ENVIRONMENTAL INSPECTOR.
2. THE TYPICAL SET BACK FOR SPOIL PILE IS 25' FROM THE TOP OF BANK. THIS MATERIAL MUST BE
3. CONTAINED AND SURROUNDED BY SILT FENCE PROTECTION TO PREVENT SATURATED SOIL FROM FLOWING BACK INTO THE WATERCOURSE.
4. CONSTRUCT 2' (MIN) WIDE X 1' (MIN) DEEP TRENCH THAT EXTENDS A MINIMUM OF 2' BEYOND BOTH SIDES OF VEHICLE CROSSING OPENING AND FILL WITH 6" STONE TO BE USED AS A SEDIMENT FILTER TRAP. GEOTEXTILE FABRIC MAY BE USED UNDER THE ROCK.
5. SCHEDULE CONSTRUCTION DURING LOW FLOW PERIOD TO THE MAXIMUM EXTENT POSSIBLE.
6. ENSURE THAT THE DAM AND VEHICLE-CROSSING ARE LOCATED FAR ENOUGH APART FROM EACH
7. OTHER TO ALLOW FOR AN EXCAVATION.
8. SET UP PUMP AND HOSE AS SHOWN, OR USE OTHER PRACTICAL ALTERNATIVES. PUMP SHOULD HAVE
9. TWICE THE PUMPING CAPACITY OF ANTICIPATED FLOW. HAVE STANDBY PUMP ON SITE.
10. INSTALL UPSTREAM DAM COMPOSED OF SANDBAGS OR CLEAN GRAVEL WITH PLASTIC LINER. INSTALL
11. DOWNSTREAM DAM IF REQUIRED TO KEEP STREAM BED DRY. ACCEPTABLE ALTERNATIVES INCLUDE STEEL PLATE AND ROCKFILL. DURING INSTALLATION, INSTALL AN IMPERVIOUS MEMBRANE, IF NECESSARY, TO LIMIT LEAKAGE, DAM MAY NEED KEYING INTO THE BANK AND STREAMBED.
12. TRENCH BREAKERS TO BE INSTALLED AT TOP OF BANKS WITH TWO ADDITIONAL TRENCH BREAKERSUPSTREAM AND DOWNSTREAM OF THE CROSSING AT 30' INTERVALS OR AS DIRECTED BY
13. ENVIRONMENTAL INSPECTOR OR OTHER QUALIFIED COMPANY PERSONNEL.
14. EXCAVATE TRENCH THROUGH PLUGS AND UNDER HOSE FROM BOTH SIDES. WORK IS TO BE COMPLETED
15. AS QUICKLY AS POSSIBLE, WITHIN THE PERMIT STIPULATIONS.
16. A. LOWER IN PIPE BY PASSING UNDER HOSE AND BACKFILL IMMEDIATELY WITH SPOIL MATERIAL.
17. B. IF THE SPOIL MATERIAL IS NOT SUITABLE, USE IMPORTED CLEAN GRANULAR MATERIAL OR OTHER MATERIAL AS REQUIRED BY PERMIT.
18. C. IF BLASTING IS REQUIRED, USE CONTROLLED BLASTING TECHNIQUES TO PREVENT DAMAGE TO THE FLOW CONVEYANCE SYSTEM. ALTERNATIVELY, BLASTING MAY BE ACCOMPLISHED PRIOR TO CONSTRUCTING THE CROSSING.
19. REMOVE TEMPORARY BRIDGE.
20. DISMANTLE DOWNSTREAM DAM, THEN UPSTREAM DAM. KEEP PUMP RUNNING TO MAINTAIN FLOW.
21. MONITOR DAM AND PUMP FOR PROPER OPERATION THROUGHOUT THE CROSSING INSTALLATION.
22. DEPTH TO THE TOP OF THE INSTALLED PIPE LOCATED WITHIN STREAMS WILL BE A MINIMUM OF 48 INCHES IN NON-BEDROCK BOTTOM STREAMS AND A MINIMUM OF 18 INCHES IN BEDROCK BOTTOM STREAMS.

* SEE DWG. 1647-100-DG-7543 SHT. 1 OF 2 FOR DETAILS

NO.	REVISION DESCRIPTION	BY	DATE	CHK'D	APP'D
		GIE	5-15-15	YA	TT

GULF INTERSTATE ENGINEERING

Marathon Pipe Line LLC

DWN. BY:	GIE	6-12-14
CHK.	JM	6-12-14
PROJ. ENGR.	VH	6-12-14
PROJ. MGR.	TT	6-12-14
CLIENT APP.		
SCALE:	N.T.S.	

PROPOSED CORNERSTONE PIPELINE

TYPICAL DAM AND PUMP "DRY" STREAM CROSSING NOTES

DWG. NO.	SHT. NO.	REV.
1647-100-DG-7543	2 OF 2	

H:_doc\1647\Engineering & Technical\10_Pipeline\Mapping\DWG\Typicals\Environmental Use\1647-100-DG-7543-02-Environmental 20150421.DWG Plotted on: May 15, 2015 - 12:09pm by imatias

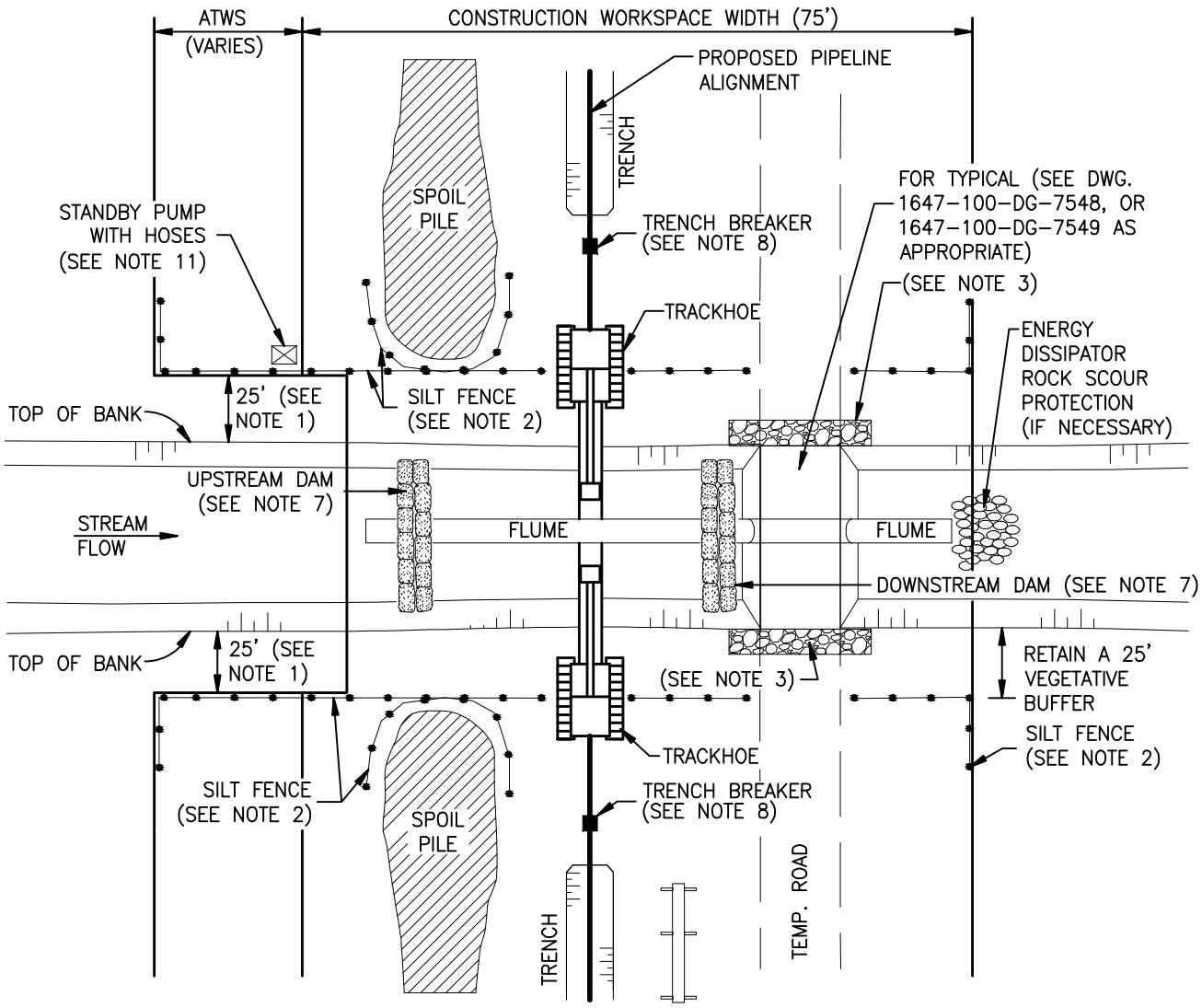

PLAN VIEW

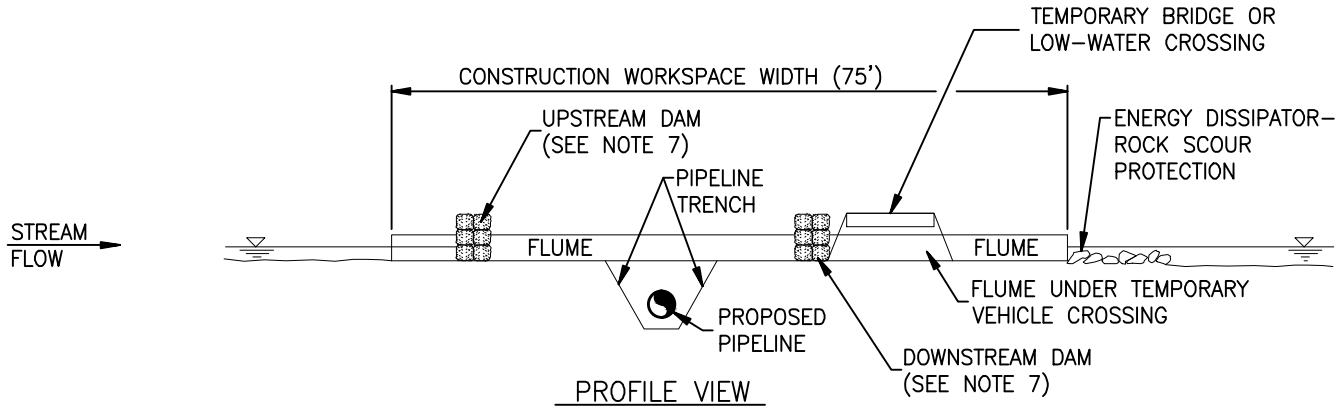

PROFILE VIEW

* SEE DWG. 1647-100-DG-7545 SHT. 2 OF 2 FOR NOTES

NO.	REVISION DESCRIPTION	BY	DATE	CHK'D	APP'D
		GIE	5-15-15	YA	TT

GULF INTERSTATE ENGINEERING

DWN. BY:	GIE	6-12-14
CHK.	JM	6-12-14
PROJ. ENGR.	VH	6-12-14
PROJ. MGR.	TT	6-12-14
CLIENT APP.		
SCALE:	N.T.S.	

Marathon Pipe Line LLC

PROPOSED CORNERSTONE PIPELINE

TYPICAL DRY FLUME CROSSING

DWG. NO.	SHT. NO.	REV.
1647-100-DG-7545	1 OF 2	

H:_doc\1647\Engineering & Technical\10_Pipeline\Mapping\DWG\Typicals\Environmental Use\1647-100-DG-7545-01-Environmental 20150421.DWG Plotted on: May 15, 2015 - 12:13pm by imatias

DRY FLUME CROSSINGS NOTES:

1. THE TYPICAL SET BACK FOR WORKSPACE IS 25' FROM TOP OF BANK; HOWEVER, SHOULD CONSTRUCTABILITY ISSUES REQUIRE THE SET BACK TO BE REDUCED, THE MINIMUM SET BACK WOULD BE AS APPROVED BY THE ENVIRONMENTAL INSPECTOR.
2. THE TYPICAL SET BACK FOR SPOIL PILE IS 25' FROM THE TOP OF BANK. THIS MATERIAL MUST BE CONTAINED AND SURROUNDED BY SILT FENCE PROTECTION TO PREVENT SATURATED SOIL FROM FLOWING BACK INTO THE WATERCOURSE.
3. CONSTRUCT 2' (MIN) WIDE X 1' (MIN) DEEP TRENCH THAT EXTENDS A MINIMUM OF 2' BEYOND BOTH SIDES OF VEHICLE CROSSING OPENING AND FILL WITH 6" STONE TO BE USED AS A SEDIMENT FILTER TRAP. GEOTEXTILE FABRIC MAY BE USED UNDER THE ROCK.
4. SCHEDULE CONSTRUCTION DURING LOW FLOW PERIOD TO MAXIMUM EXTENT POSSIBLE.
5. FLUME CAPACITY DURING DRY CROSSING SHALL BE SUFFICIENT TO ACCOMMODATE TWICE THE FLOW MEASURED AT THE TIME OF CONSTRUCTION PROVIDED THAT THE FLUMES WILL BE IN PLACE NOT MORE THAN 72 HOURS AND NO PRECIPITATION IS FORECAST. HAVE STAND-BY PUMP WITH HOSE ON SITE, TO ACCOMMODATE TWICE THE FLOW RATE.
6. ENSURE THAT THE DAM AND VEHICLE-CROSSING ARE LOCATED FAR ENOUGH APART FROM EACH OTHER TO ALLOW FOR AN EXCAVATION.
7. INSTALL UPSTREAM DAM COMPOSED OF SANDBAGS OR CLEAN GRAVEL WITH PLASTIC LINER. INSTALL DOWNSTREAM DAM IF REQUIRED TO KEEP STREAM BED DRY. ACCEPTABLE ALTERNATIVES INCLUDE STEEL PLATE AND ROCKFILL. DURING INSTALLATION, INSTALL AN IMPERVIOUS MEMBRANE, IF NECESSARY, TO LIMIT LEAKAGE, DAM MAY NEED KEYING INTO THE BANK AND STREAMBED.
8. TRENCH BREAKERS TO BE INSTALLED AT TOP OF BANKS WITH TWO ADDITIONAL TRENCH BREAKERS UPSTREAM AND DOWNSTREAM OF THE CROSSING AT 30' INTERVALS OR AS DIRECTED BY ENVIRONMENTAL INSPECTOR OR OTHER QUALIFIED COMPANY PERSONNEL.
9. EXCAVATE TRENCH THROUGH BREAKERS AND UNDER FLUME FROM BOTH SIDES. WORK IS TO BE COMPLETED AS QUICKLY AS POSSIBLE, WITHIN THE PERMIT STIPULATIONS.
   A. LOWER IN PIPE BY PASSING UNDER FLUME AND BACKFILL IMMEDIATELY WITH SPOIL MATERIAL.
   B. IF THE SPOIL MATERIAL IS NOT SUITABLE, USE IMPORTED CLEAN GRANULAR MATERIAL.
   C. IF BLASTING IS REQUIRED, USE CONTROLLED BLASTING TECHNIQUES TO PREVENT DAMAGE TO THE FLOW CONVEYANCE SYSTEM. ALTERNATIVELY, BLASTING MAY BE ACCOMPLISHED PRIOR TO CONSTRUCTING THE CROSSING.
10. MONITOR FLUME FOR PROPER OPERATION THROUGHOUT THE CROSSING INSTALLATION.
11. STAND BY PUMP TO BE USED TO DEWATER PIPE TRENCH AS NECESSARY. DISCHARGE THROUGH FILTER BAG, SEE DWG. 1647-100-DG-7564.
12. REMOVE TEMPORARY BRIDGE.
13. DISMANTLE DOWNSTREAM DAM, THEN UPSTREAM DAM. KEEP PUMP RUNNING TO MAINTAIN FLOW.
14. MONITOR DAM AND PUMP FOR PROPER OPERATION THROUGHOUT THE CROSSING INSTALLATION.
15. DEPTH TO THE TOP OF THE INSTALLED PIPE LOCATED WITHIN STREAMS WILL BE A MINIMUM OF 48 INCHES IN NON-BEDROCK BOTTOM STREAMS AND A MINIMUM OF 18 INCHES IN BEDROCK BOTTOM STREAMS.

* SEE DWG. 1647-100-DG-7545 SHT. 1 OF 2 FOR DETAILS

NO.	REVISION DESCRIPTION	BY	DATE	CHK'D	APP'D
		GIE	5-15-15	YA	TT

GULF INTERSTATE ENGINEERING

Marathon Pipe Line LLC

DWN. BY:	GIE	6-12-14
CHK.	JM	6-12-14
PROJ. ENGR.	VH	6-12-14
PROJ. MGR.	TT	6-12-14
CLIENT APP.		
SCALE:	N.T.S.	

PROPOSED CORNERSTONE PIPELINE

TYPICAL DRY FLUME CROSSING NOTES

DWG. NO.	SHT. NO.	REV.
1647-100-DG-7545	2 OF 2	

H:_doc\1647\Engineering & Technical\10_Pipeline\Mapping\DWG\Typicals\Environmental Use\1647-100-DG-7545-02-Environmental 20150421.DWG Plotted on: May 15, 2015 - 12:14pm by jmatias

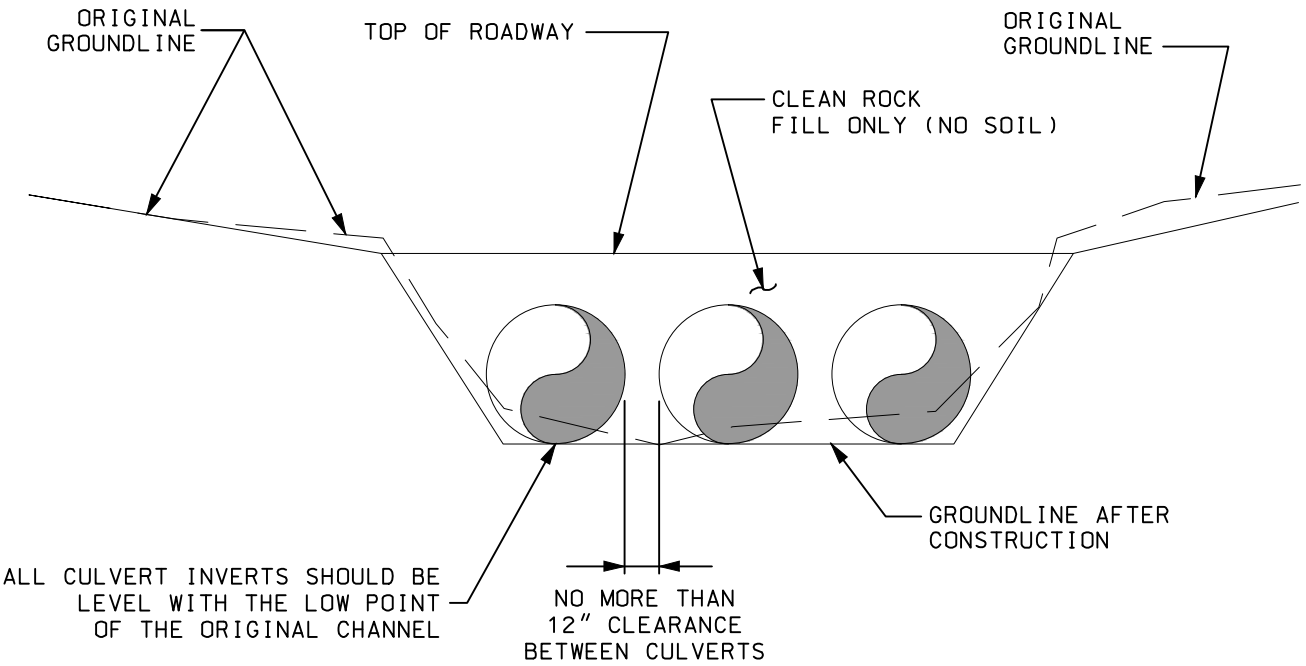

NOTES:

1. INSTREAM CONSTRUCTION IS SUBJECT TO AGENCY REVIEW AND PERMIT.

2. THIS IS A CONCEPTUAL DRAWING. THE NUMBER AND SIZE OF CULVERTS AND OTHER DETAILS WILL VARY DEPENDING ON SPECIFIC SITE CONDITIONS.

3. THE CULVERTS AND BACKFILL MUST BE CONTAINED WITHIN THE STREAM CHANNEL AS SHOWN ABOVE. DURING THE CONSTRUCTION OF THE APPROACHES AND ACCESS ROADWAY ACROSS THE FLOODPLAIN, UNSTABLE AND UNCONSOLIDATED MATERIALS UNSUITABLE FOR ROADWAYS MAY BE EXCAVATED AND REPLACED WITH RIPRAP, CRUSHED STONE, OR OTHER STABLE ROAD CONSTRUCTION MATERIALS. THIS MAY ONLY BE DONE, HOWEVER, WITH THE FOLLOWING PROVISIONS: (1) THE DISPOSAL OF EXCESS, UNCONSOLIDATED MATERIALS THUS EXCAVATED MUST BE OUTSIDE OF THE FLOODPLAIN AND (2) THE FINISHED SURFACE OF THE COMPLETED ROAD MAY BE NO MORE THAN THREE INCHES (3") ABOVE THE PRE-CONSTRUCTION SURFACE OF THE FLOODPLAIN AT ANY POINT BEYOND THE TOP OF BANKS.

4. DESIGN MAY VARY BASED ON EACH INDIVIDUAL CROSSING.

NO.	REVISION DESCRIPTION	BY	DATE	CHK'D	APP'D
		GIE	4-21-15	YA	TT

GULF INTERSTATE ENGINEERING

DWN. BY:	GIE	6-12-14
CHK.	JM	6-12-14
PROJ. ENGR.	VH	6-12-14
PROJ. MGR.	TT	6-12-14
CLIENT APP.		
SCALE:	N.T.S.	

Marathon Pipe Line LLC

PROPOSED CORNERSTONE PIPELINE

TYPICAL LOW-WATER CROSSING

DWG. NO.	SHT. NO.	REV.
1647-100-DG-7547	1 OF 1	

H:_doc\1647\Engineering & Technical\10_Pipeline\Mapping\DWG\Typicals\Environmental Use\1647-100-DG-7547-Environmental 20150421.DWG Plotted on: Apr 21, 2015 - 10:43am by bbrooks

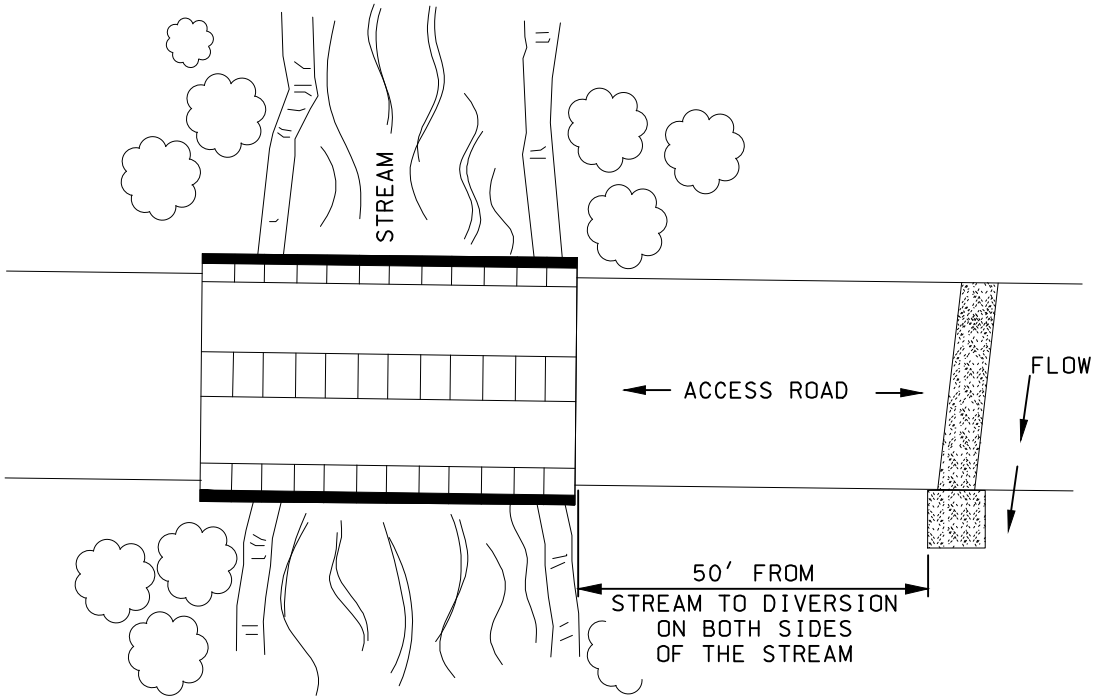

PLAN VIEW

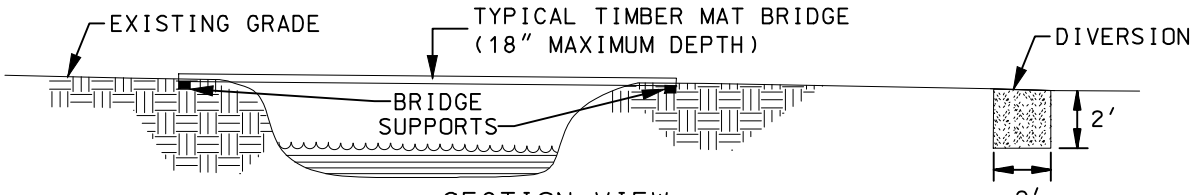

SECTION VIEW

THE FOLLOWING IS A SEQUENCE OF CONSTRUCTION AND MITIGATION MEASURES TO BE FOLLOWED AT ALL TEMPORARY BRIDGE CROSSINGS.

1. CONTRACTOR TO DESIGN BRIDGE AND SUPPORT, DESIGN IS TO BE APPROVED BY MARATHON PRIOR TO INSTALLATION.

2. A PRE-FABRICATED BRIDGE OR FLATBED RAILCAR CROSSING MAY BE USED AS NECESSARY FOR THE TEMPORARY BRIDGE.

3. INSTALL THE BRIDGE IN A MANNER THAT WILL MINIMIZE SEDIMENT ENTERING THE WATER. STRINGERS MUST BE DESIGNED TO SUPPORT THE LOADS EXPECTED ON THE BRIDGE. CURBS AT LEAST 6 IN. HIGH MUST BE INSTALLED ALONG THE EDGE OF THE DECK TO CONTAIN SEDIMENT AND DEBRIS ON THE BRIDGE. FASTENERS CONNECTING COMPONENTS MUST BE STRONG ENOUGH TO HOLD THEM IN POSITION DURING THE LIFE OF THE BRIDGE.

4. ROAD APPROACHES LEADING TO THE BRIDGE MUST BE LEVEL AND STABLE SO EQUIPMENT LOADS ARE SUPPORTED A SUFFICIENT DISTANCE BACK FROM THE WATER TO REDUCE SEDIMENT AND DEBRIS ENTERING THE STREAM FROM EQUIPMENT TRACKS. DO NOT USE SOIL TO CONSTRUCT OR STABILIZE EQUIPMENT BRIDGES. NO FILL MATERIAL SHALL BE USED TO TRANSITION FROM ACCESS ROAD TO BRIDGE DECK. IF CUTS ARE NEEDED TO OBTAIN A SATISFACTORY GRADE, THEY ARE TO BE DUG WITH SIDE DITCHES AND STABLE SLOPES. EROSION AND SEDIMENT CONTROL MEASURES ARE TO BE INSTALLED TO KEEP SEDIMENT ON LAND (E.G., SILT FENCING, FILTER CLOTH, RIP-RAP, SEED AND MULCH, ETC.).

5. PERIODICALLY CHECK BRIDGE INSTALLATION AND REMOVE ANY BUILD-UP OF SEDIMENT OR DEBRIS ON THE BRIDGE.

NO.	REVISION DESCRIPTION	BY	DATE	CHK'D	APP'D
		GIE	4-21-15	YA	TT

GULF INTERSTATE ENGINEERING

Marathon Pipe Line LLC

DWN. BY:	GIE	6-12-14
CHK.	JM	6-12-14
PROJ. ENGR.	VH	6-12-14
PROJ. MGR.	TT	6-12-14
CLIENT APP.		
SCALE:	N.T.S.	

PROPOSED CORNERSTONE PIPELINE

TYPICAL TEMPORARY BRIDGE
AT CLEAR SPAN CROSSING

DWG. NO.	SHT. NO.	REV.
1647-100-DG-7548	1 OF 1	

H:_doc\1647\Engineering & Technical\10_Pipeline\Mapping\DWG\Typicals\Environmental Use\1647-100-DG-7548-Environmental 20150421.DWG Plotted on: Apr 21, 2015 - 10:44am by bbrooks

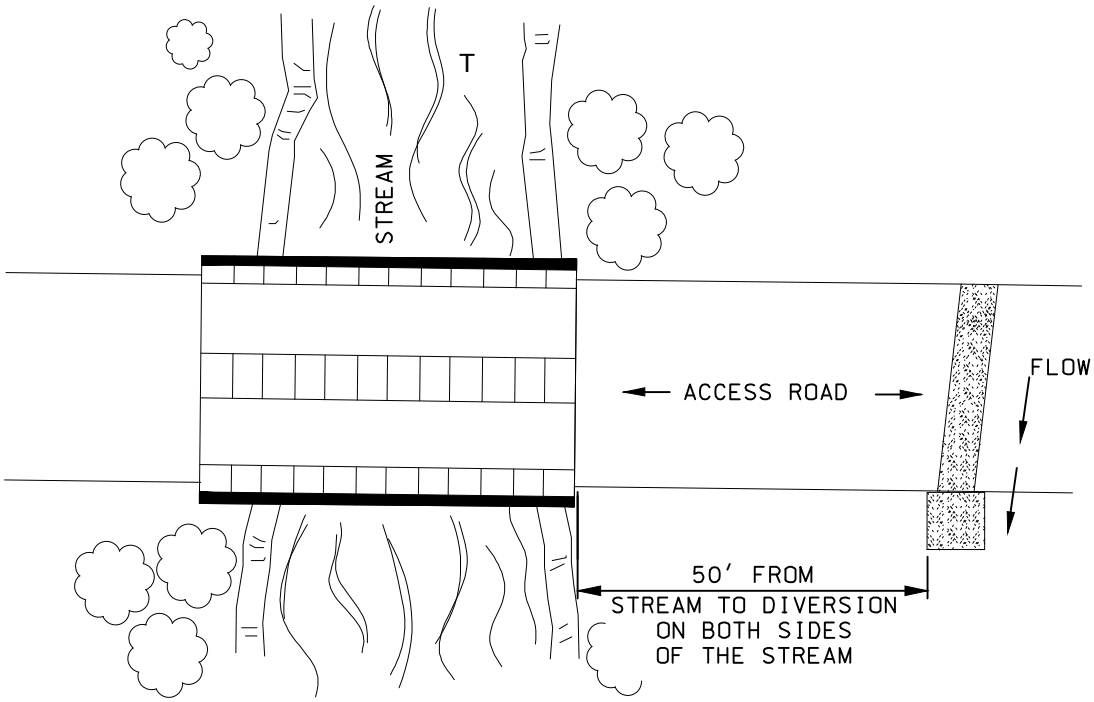

PLAN VIEW

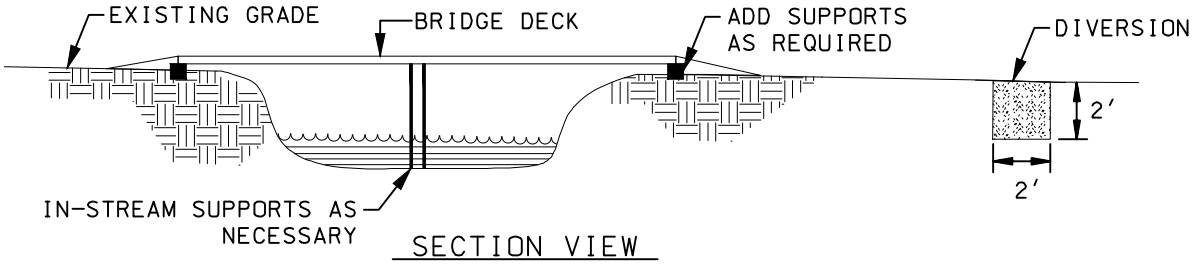

SECTION VIEW

THE FOLLOWING IS A SEQUENCE OF CONSTRUCTION AND MITIGATION MEASURES TO BE FOLLOWED AT ALL TEMPORARY BRIDGE CROSSINGS.

1. CONTRACTOR TO DESIGN BRIDGE AND SUPPORT, DESIGN IS TO BE APPROVED BY MARATHON PRIOR TO INSTALLATION.

2. A PRE-FABRICATED BRIDGE OR FLATBED RAILCAR CROSSING MAY BE USED AS NECESSARY FOR THE TEMPORARY BRIDGE.

3. INSTALL THE BRIDGE IN A MANNER THAT WILL MINIMIZE SEDIMENT ENTERING THE WATER. STRINGERS MUST BE DESIGNED TO SUPPORT THE LOADS EXPECTED ON THE BRIDGE. CURBS AT LEAST 6 IN. HIGH MUST BE INSTALLED ALONG THE EDGE OF THE DECK TO CONTAIN SEDIMENT AND DEBRIS ON THE BRIDGE. FASTENERS CONNECTING COMPONENTS MUST BE STRONG ENOUGH TO HOLD THEM IN POSITION DURING THE LIFE OF THE BRIDGE.

4. ROAD APPROACHES LEADING TO THE BRIDGE MUST BE LEVEL AND STABLE SO EQUIPMENT LOADS ARE SUPPORTED A SUFFICIENT DISTANCE BACK FROM THE WATER TO REDUCE SEDIMENT AND DEBRIS ENTERING THE STREAM FROM EQUIPMENT TRACKS. SOIL MAY BE USED TO SUPPORT OR STABILIZE EQUIPMENT BRIDGES. EROSION AND SEDIMENT CONTROL MEASURES ARE TO BE INSTALLED TO KEEP SEDIMENT ON LAND (E.G., SILT FENCING, FILTER CLOTH, RIP-RAP, SEED AND MULCH, ETC.).

5. PERIODICALLY CHECK BRIDGE INSTALLATION AND REMOVE ANY BUILD-UP OF SEDIMENT OR DEBRIS ON THE BRIDGE.

NO.	REVISION DESCRIPTION	BY	DATE	CHK'D	APP'D
		GIE	4-21-15	YA	TT

GULF INTERSTATE ENGINEERING

Marathon Pipe Line LLC

DWN. BY:	GIE	6-12-14
CHK.	JM	6-12-14
PROJ. ENGR.	VH	6-12-14
PROJ. MGR.	TT	6-12-14
CLIENT APP.		
SCALE:	N.T.S.	

PROPOSED CORNERSTONE PIPELINE

TYPICAL TEMPORARY BRIDGE WITH IN-STREAM SUPPORTS

DWG. NO.	SHT. NO.	REV.
1647-100-DG-7549	1 OF 1	

H:_doc\1647\Engineering & Technical\10_Pipeline\Mapping\DWG\Typicals\Environmental Use\1647-100-DG-7549-Environmental 20150421.DWG Plotted on: Apr 21, 2015 - 10:45am by bbrooks

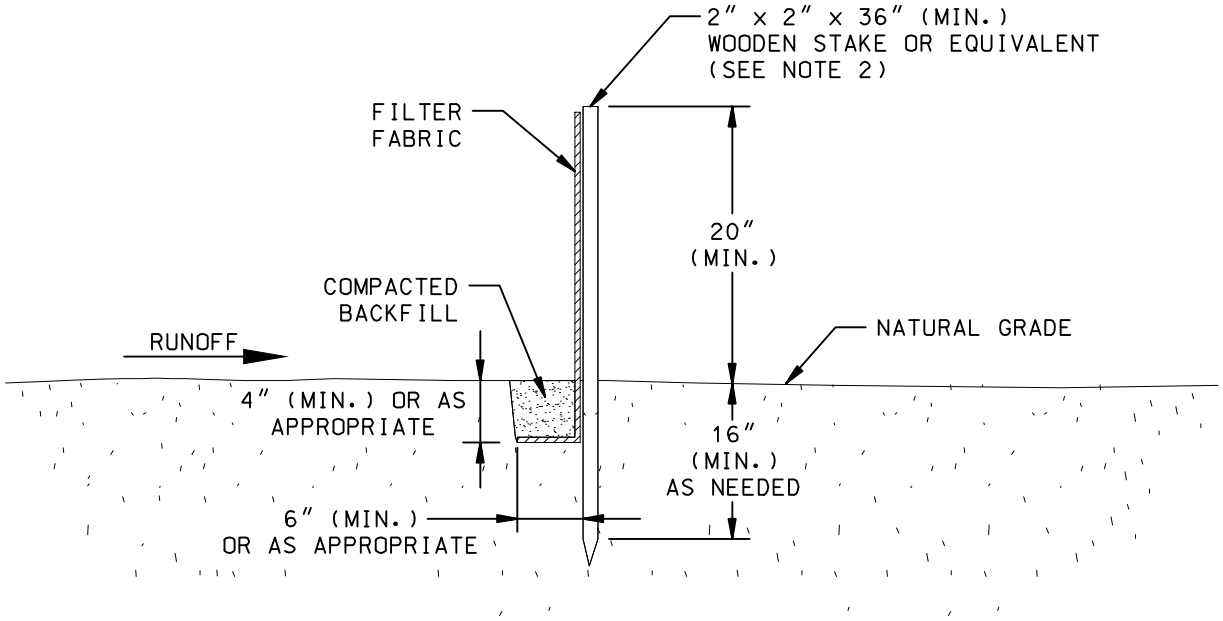

SECTION VIEW

NOTES:

1. SILT FENCES ARE TO BE USED IN AREAS WHERE SHEET FLOW OR RELATIVELY SMALL VOLUMES OF WATER CAN BE EXPECTED TO OCCUR. FOR LARGER VOLUMES SUCH AS WITHIN A DEFINED CHANNEL, A CHECK DAM WILL BE REQUIRED.
2. STAKES ARE TO BE PLACED A MINIMUM OF 10' APART, AS DIRECTED BY ENVIRONMENTAL INSPECTOR.
3. ATTACH FILTER FABRIC AT EACH POST AT A MINIMUM OF THREE LOCATIONS.
4. ANCHOR AT LEAST 12-INCHES OF FILTER FABRIC IN AN APPROPRIATE TRENCH WITH WELL COMPACTED BACKFILL OVER THE FABRIC AS SHOWN TO PREVENT UNDERMINING.
5. TO ELIMINATE POSSIBLE END FLOW, BOTH ENDS OF THE SILT FENCE SHALL BE TURNED AND EXTENDED UP SLOPE AS DIRECTED BY ENVIRONMENTAL INSPECTOR.
6. SILT FENCES ARE TO BE CHECKED AND MAINTAINED ON A REGULAR BASIS AND IN ACCORDANCE WITH PERMIT REQUIREMENTS. REMOVE ANY BUILD-UP OF SEDIMENT WHEN THE HEIGHT OF SEDIMENT EXCEEDS APPROXIMATELY 50% OF THE HEIGHT OF THE BARRIER.
7. MATERIAL SHOULD BE WOVEN GEOTEXTILE FABRIC. SECONDARY REINFORCEMENT, SUCH AS A CONSTRUCTION BARRIER FENCE OR WIRE MESH CAN ALSO BE USED BEHIND THE FILTER FABRIC.
8. WHERE ANCHORING CONDITIONS FOR THE SILT FENCE ARE POOR, PLACE ANCHORED STRAW BALES OR SANDBAGS ON UPSTREAM/DOWNSTREAM SIDE OF THE SILT FENCE AS REQUIRED.

NO.	REVISION DESCRIPTION	BY	DATE	CHK'D	APP'D
		GIE	4-21-15	YA	TT

GULF INTERSTATE ENGINEERING

DWN. BY:	GIE	6-12-14
CHK.	JM	6-12-14
PROJ. ENGR.	VH	6-12-14
PROJ. MGR.	TT	6-12-14
CLIENT APP.		
SCALE:	N.T.S.	

Marathon Pipe Line LLC

PROPOSED CORNERSTONE PIPELINE

TYPICAL SILT FENCE BARRIER

DWG. NO.	SHT. NO.	REV.
1647-100-DG-7560	1 OF 1	

H:_doc\1647\Engineering & Technical\10_Pipeline\Mapping\DWG\Typicals\Environmental Use\1647-100-DG-7560-Environmental 20150421.DWG Plotted on: Apr 21, 2015 - 10:46am by bbrooks

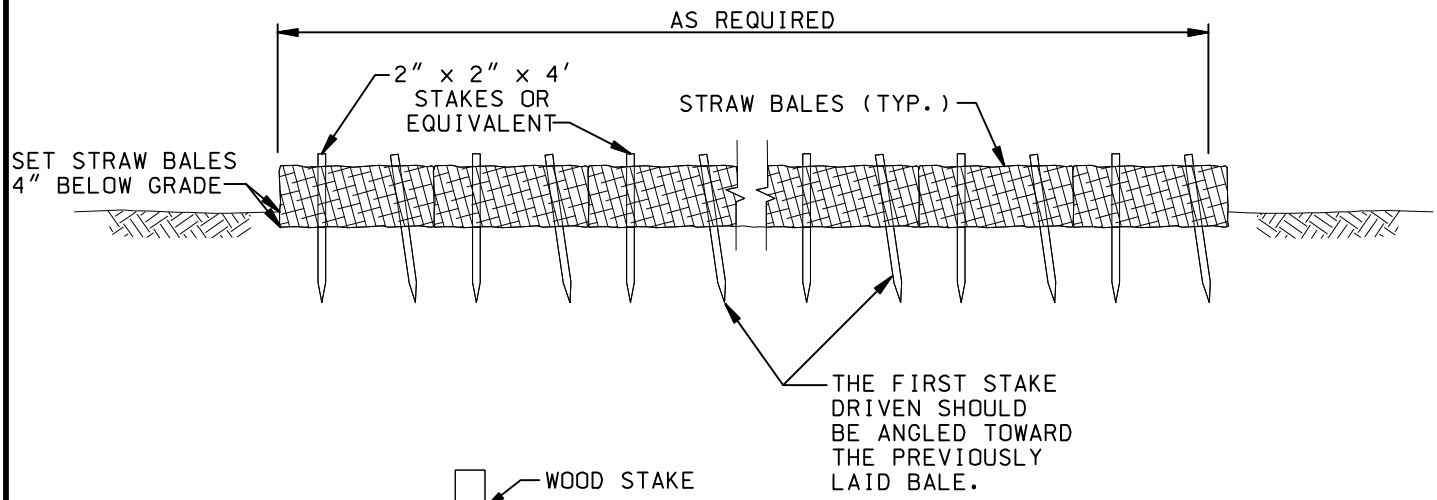

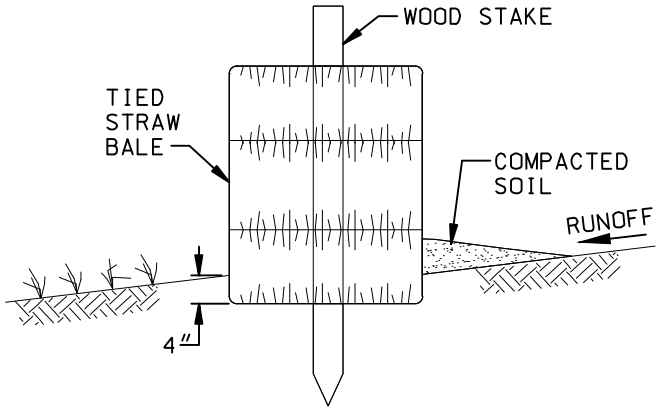

EMBEDDED
SECTION

NOTES:

1. EACH BALE SHOULD BE SECURED BY AT LEAST TWO STAKES. THE FIRST STAKE IN EACH BALE SHALL BE DRIVEN TOWARD THE PREVIOUSLY LAID BALE TO FORCE THE BALES TOGETHER.
2. COMPACT EXCAVATED SOIL AS NECESSARY AGAINST THE UPHILL SIDE OF THE BARRIER TO PREVENT PIPING. SEGREGATED TOP SOIL MAY NOT BE USED FOR THIS PURPOSE.
3. TO ELIMINATE POSSIBLE END FLOW, BOTH ENDS OF THE STRAW BALE BARRIER SHOULD BE TURNED AND EXTENDED UP SLOPE. EMBED BALES IN EARTH APPROXIMATELY 4" DEPENDENT UPON SOIL CONDITIONS.
4. STRAW BALE BARRIERS REQUIRE CONTINUAL MAINTENANCE TO REMOVE COLLECTED SEDIMENT AND REPLACE DAMAGED BALES. MAINTAIN AND REPAIR DAMAGED BALES, END RUNS, AND UNDERCUT BALES AS NEEDED.
5. SEDIMENT DEPOSITS SHOULD BE REMOVED AFTER EACH RAINFALL, AS NECESSARY. THEY MUST BE REMOVED WHEN THE LEVEL OF DEPOSITION REACHES APPROXIMATELY ONE-HALF THE HEIGHT OF THE BARRIER.

NO.	REVISION DESCRIPTION	BY	DATE	CHK'D	APP'D
		GIE	4-21-15	YA	TT

GULF INTERSTATE ENGINEERING

DWN. BY:	GIE	6-12-14
CHK.	JM	6-12-14
PROJ. ENGR.	VH	6-12-14
PROJ. MGR.	TT	6-12-14
CLIENT APP.		
SCALE:	N.T.S.	

Marathon Pipe Line LLC

PROPOSED CORNERSTONE PIPELINE

TYPICAL STRAW BALE BARRIER

DWG. NO. 1647-100-DG-7561 | SHT. NO. 1 OF 1 | REV.

H:_doc\1647\Engineering & Technical\10_Pipeline\Mapping\DWG\Typicals\Environmental Use\1647-100-DG-7561-Environmental 20150421.DWG Plotted on: Apr 21, 2015 - 10:48am by bbrooks

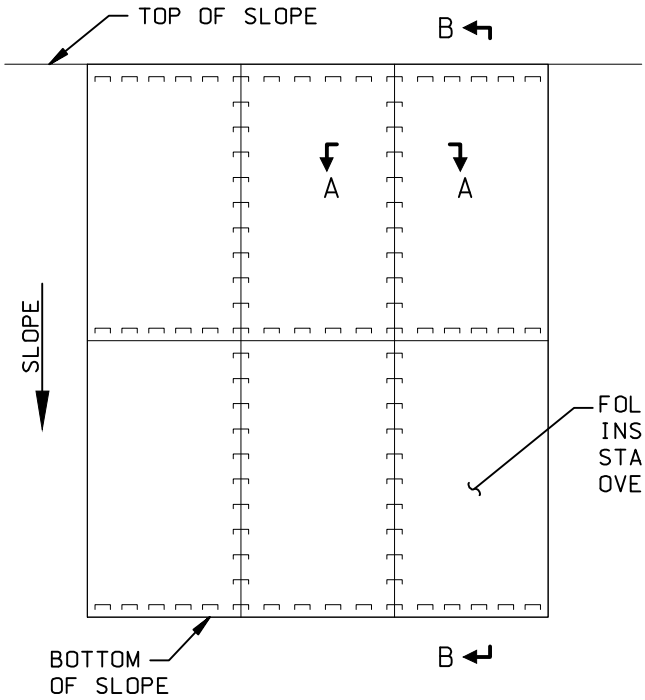

PLAN

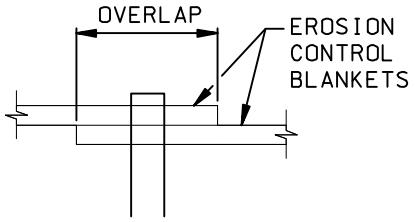

SECTION 'A-A'

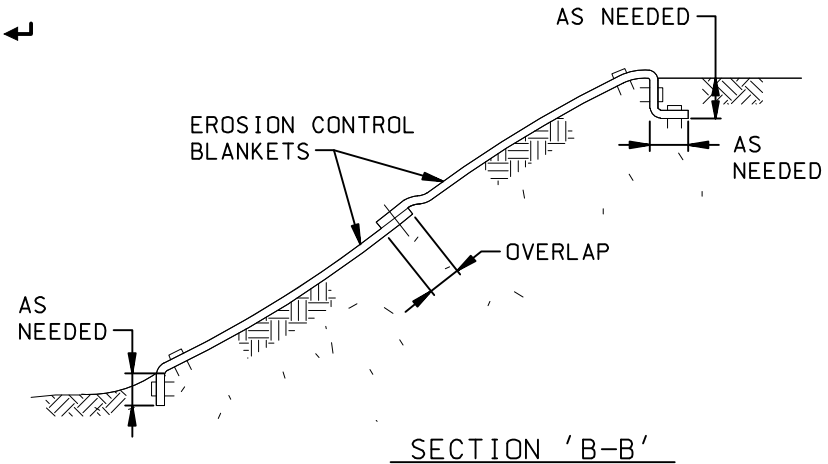

SECTION 'B-B'

NOTES:

1. EROSION CONTROL BLANKETS SHALL BE USED, AS APPROPRIATE.
2. INSTALL BLANKETS IN ACCORDANCE WITH MANUFACTURER'S INSTRUCTIONS.
3. PREPARE SOIL BEFORE INSTALLING BLANKETS, INCLUDING GRADING, REMOVAL OF LARGE ROCKS AND DEBRIS, AND THE APPLICATION OF SEED AND FERTILIZER.
4. GREEN EROSION CONTROL BLANKETS SHALL EXTEND COMPLETELY ACROSS DISTURBED AREAS TO PROTECT ERODIBLE SURFACES.
5. BEGIN AT THE TOP OF THE SLOPE BY ANCHORING THE BLANKET IN A TRENCH SIZED ACCORDINGLY. BACKFILL AND COMPACT THE TRENCH AFTER STAPLING.
6. ROLL THE BLANKETS DOWN THE SLOPE IN THE DIRECTION OF THE WATER FLOW.
7. AS AN ALTERNATIVE TO STAPLES, WOODEN STAKES CAN BE USED.
8. ENSURE COMPLETE CONTACT BETWEEN THE BLANKETS AND THE SLOPE FACE. ADDITIONAL STAPLES CAN BE USED TO ELIMINATE GAPS.

NO.	REVISION DESCRIPTION	BY	DATE	CHK'D	APP'D
		GIE	4-21-15	YA	TT

GULF INTERSTATE ENGINEERING

DWN. BY:	GIE	6-12-14
CHK.	JM	6-12-14
PROJ. ENGR.	VH	6-12-14
PROJ. MGR.	TT	6-12-14
CLIENT APP.		
SCALE:	N.T.S.	

Marathon Pipe Line LLC

PROPOSED CORNERSTONE PIPELINE

TYPICAL EROSION CONTROL BLANKET INSTALLATION

DWG. NO.	SHT. NO.	REV.
1647-100-DG-7562	1 OF 1	

H:_doc\1647\Engineering & Technical\10_Pipeline\Mapping\DWG\Typicals\Environmental Use\1647-100-DG-7562-Environmental 20150421.DWG Plotted on: Apr 21, 2015 - 10:48am by bbrooks

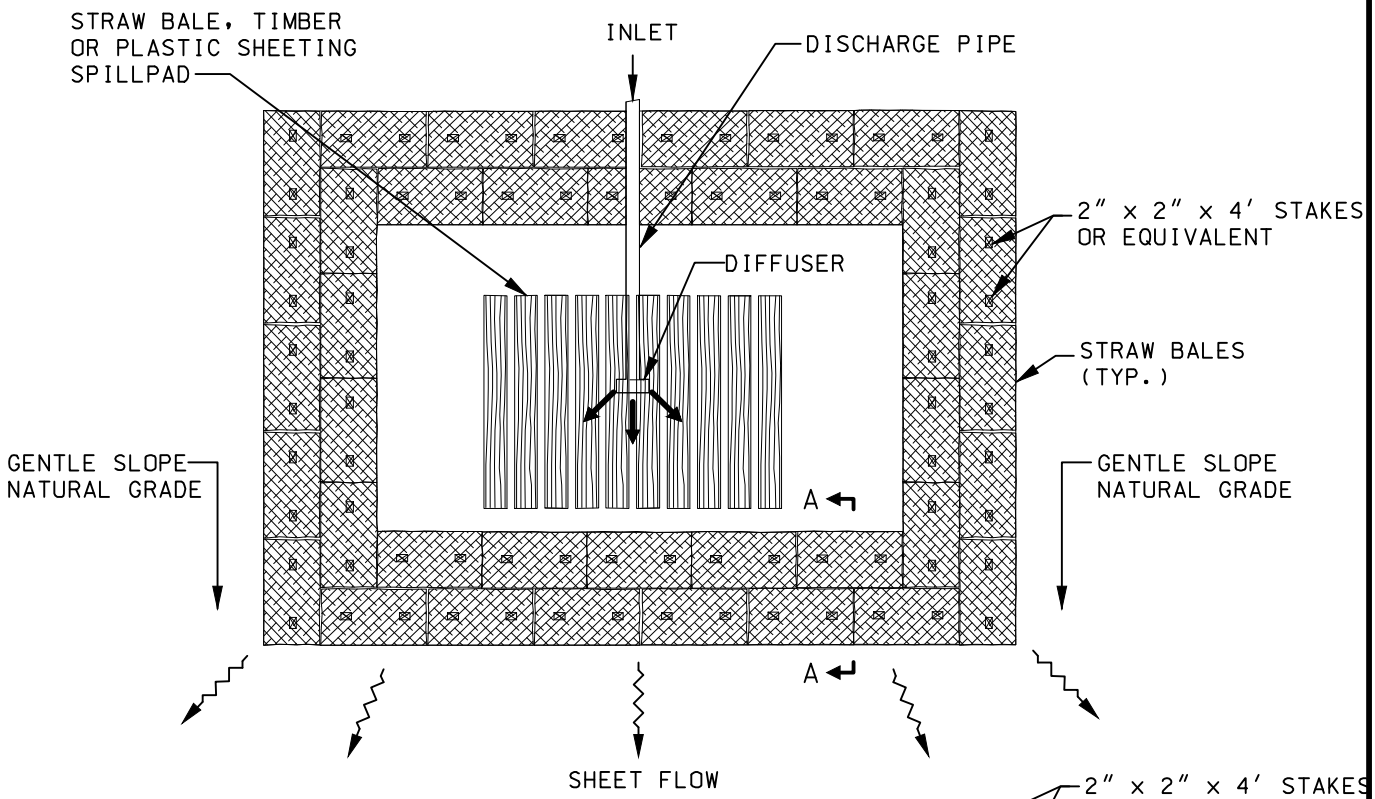

PLAN

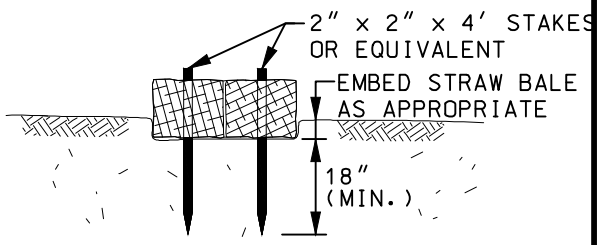

SECTION 'A-A'

NOTES:

1. INSTALL A STRAW BALE DEWATERING STRUCTURE WHEREVER IT IS NECESSARY AND AS DIRECTED BY THE ENVIRONMENTAL INSPECTOR TO PREVENT THE FLOW OF HEAVILY SILT LADEN WATER INTO WATERBODIES OR WETLANDS.

2. DISCHARGE SITE SHOULD BE WELL VEGETATED AND LOCATED AT LEAST 50' FROM ANY WATERCOURSE OR WETLAND. THE TOPOGRAPHY OF THE SITE SHOULD BE SUCH THAT WATER WILL FLOW INTO THE DEWATERING STRUCTURE AND AWAY FROM ANY WORK AREAS. THE AREA DOWN SLOPE FROM THE DEWATERING SITE MUST BE REASONABLY FLAT OR STABILIZED BY VEGETATION OR OTHER MEANS TO ALLOW THE FILTERED WATER TO CONTINUE AS SHEET FLOW.

3. DIRECT THE PUMPED WATER ONTO A STABLE SPILL PAD CONSTRUCTED OF GEOTEXTILE, WEIGHTED TIMBERS, OR A WOVEN GEOTEXTILE STAKED TO THE GROUND SURFACE. BEYOND THE SPILL PAD, FORCE THE DISCHARGE WATER INTO SHEET FLOW USING STRAW BALES AND THE NATURAL TOPOGRAPHY.

4. DISCHARGE RATES SHOULD BE SUCH THAT THE CAPACITY OF THE STRUCTURE WILL NOT BE EXCEEDED.

5. DISCHARGE WATER SHALL BE FORCED INTO SHEET FLOW IMMEDIATELY BEYOND THE SPILL PAD USING A COMBINATION OF STRAW BALES AND THE NATURAL TOPOGRAPHY. RECESS STRAW BALES APPROPRIATELY. DRIVE TWO (2) STAKES OR REBAR INTO EACH BALE TO ANCHOR THEM IN PLACE.

6. MANUFACTURED FILTER BAGS ARE A SUITABLE ALTERNATIVE TO STRAW BALE STRUCTURES FOR TRENCH DEWATERING. FILTER BAGS SHALL BE INSTALLED AS SPECIFIED BY THE MANUFACTURER. DISPOSE OF FULL FILTER BAGS AT AN APPROVED OFF-SITE FACILITY.

NO.	REVISION DESCRIPTION	BY	DATE	CHK'D	APP'D
		GIE	4-21-15	YA	TT

GULF INTERSTATE ENGINEERING

Marathon Pipe Line LLC

DWN. BY:	GIE	6-12-14
CHK.	JM	6-12-14
PROJ. ENGR.	VH	6-12-14
PROJ. MGR.	TT	6-12-14
CLIENT APP.		
SCALE:	N.T.S.	

PROPOSED CORNERSTONE PIPELINE

TYPICAL STRAW BALE DEWATERING STRUCTURE

DWG. NO.	SHT. NO.	REV.
1647-100-DG-7563	1 OF 1	

H:_doc\1647\Engineering & Technical\10_Pipeline\Mapping\DWG\Typicals\Environmental Use\1647-100-DG-7563-Environmental 20150421.DWG Plotted on: Apr 21, 2015 - 10:49am by bbrooks

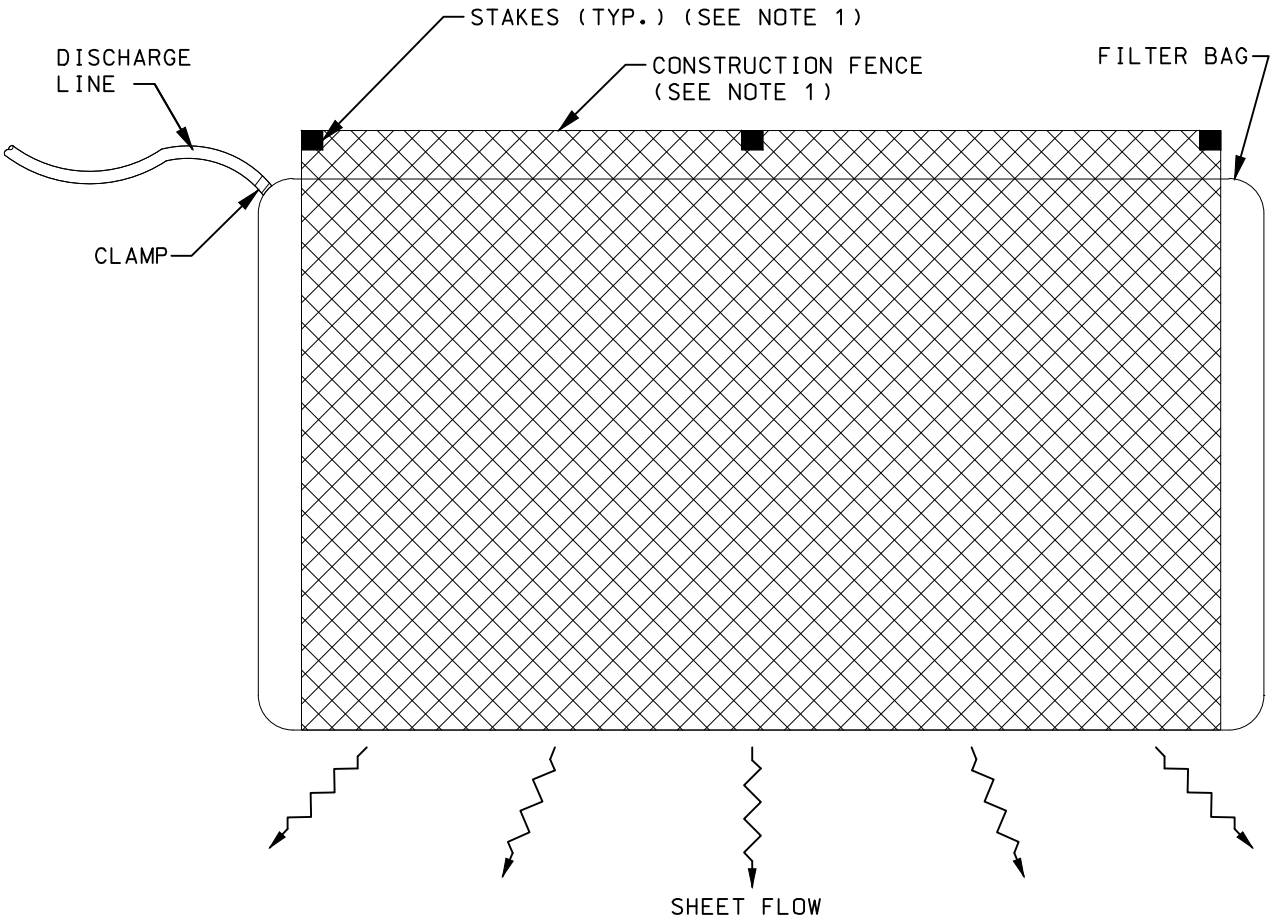

PLAN VIEW

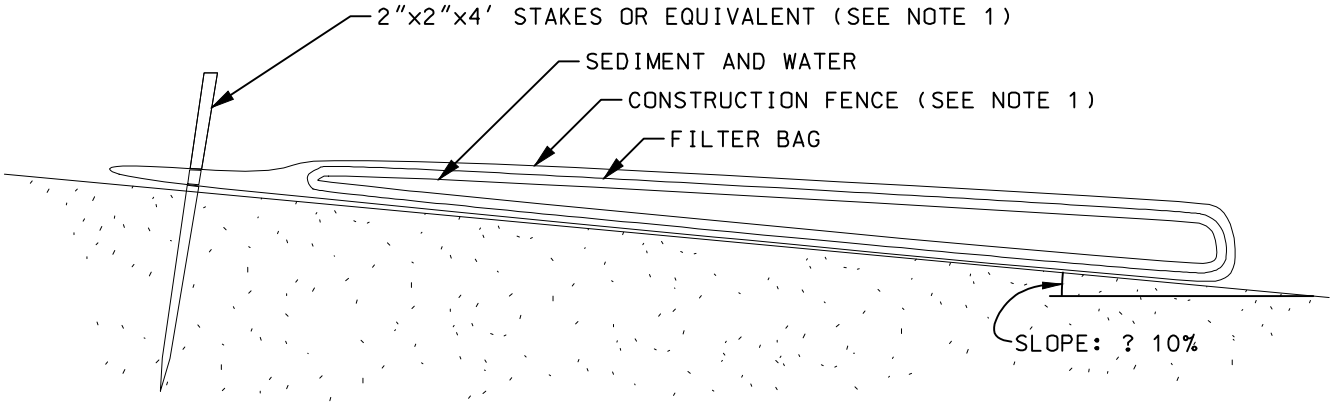

SECTION VIEW

1. IF NECESSARY TO PREVENT MOVEMENT OF THE FILTER BAG DOWN A SLOPE, STAKED CONSTRUCTION FENCING MAY BE REQUIRED TO HOLD IT IN PLACE.

NO.	REVISION DESCRIPTION	BY	DATE	CHK'D	APP'D
		GIE	4-21-15	YA	TT

GULF INTERSTATE ENGINEERING

DWN. BY:	GIE	6-12-14
CHK.	JM	6-12-14
PROJ. ENGR.	VH	6-12-14
PROJ. MGR.	TT	6-12-14
CLIENT APP.		
SCALE:	N.T.S.	

Marathon Pipe Line LLC

PROPOSED CORNERSTONE PIPELINE

TYPICAL FILTER BAG DEWATERING

DWG. NO. 1647-100-DG-7564 | SHT. NO. 1 OF 1 | REV.

H:_doc\1647\Engineering & Technical\10_Pipeline\Mapping\DWG\Typicals\Environmental Use\1647-100-DG-7564-Environmental 20150421.DWG Plotted on: Apr 21, 2015 - 10:51am by bbrooks

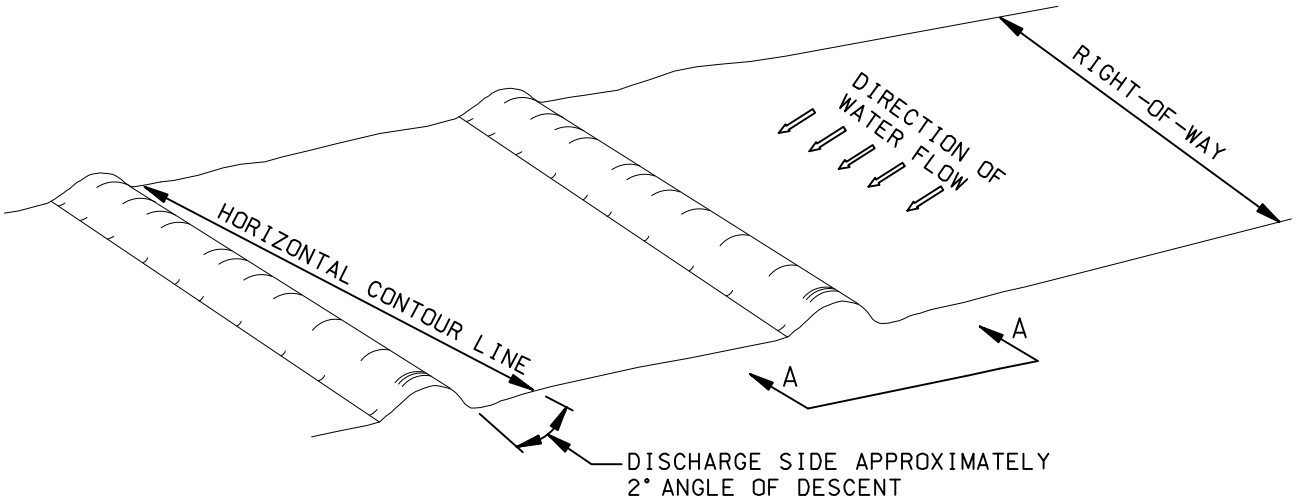

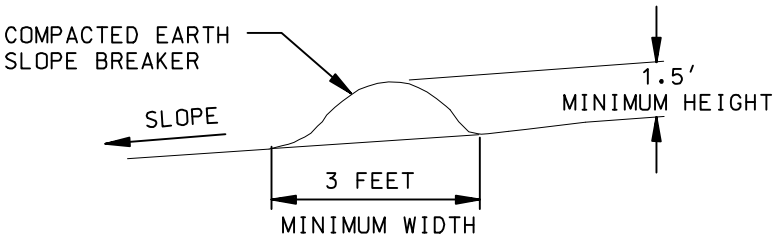

VIEW A-A

SLOPE BREAKER SPACING	
GRADE, %	SPACING (FT)
0 - 5	NONE
5 - 15	300
15 - 30	200
>30	100

NOTES:

1. WATER SHALL BE DIVERTED OFF THE GRADED RIGHT-OF-WAY BY CONSTRUCTING SLOPE BREAKERS ACCORDING TO THE FOLLOWING PROCEDURE.

   A. THE HORIZONTAL CONTOUR LINE ACROSS THE ENTIRE RIGHT-OF-WAY WIDTH WILL BE ESTABLISHED AT EACH SLOPE BREAKER. THE HORIZONTAL CONTOUR LINE WILL BE PERPENDICULAR TO THE DIRECTION OF FLOW. A SURVEYOR'S LEVEL OR HAND LEVEL WILL BE USED TO LOCATE THE CONTOUR LINE.

   B. THE SLOPE BREAKER SHALL SLOPE DOWNHILL APPROXIMATELY 2° FROM HORIZONTAL CONTOUR LINE AND TOWARD DISCHARGE SIDE. CHANNEL THE FLOW TO THE SIDE OF THE GRADED RIGHT-OF-WAY WITH THE BEST VEGETATIVE COVER AND TOPOGRAPHY. IF VEGETATION IS SPARSE PROTECT OUTLET WITH STRAW BALES.

NO.	REVISION DESCRIPTION	BY	DATE	CHK'D	APP'D
		GIE	4-21-15	YA	TT

GULF INTERSTATE ENGINEERING

DWN. BY:	GIE	6-12-14
CHK.	JM	6-12-14
PROJ. ENGR.	VH	6-12-14
PROJ. MGR.	TT	6-12-14
CLIENT APP.		
SCALE:	N.T.S.	

Marathon Pipe Line LLC

PROPOSED CORNERSTONE PIPELINE

PIPELINE STANDARD EROSION CONTROL SLOPE BREAKERS

DWG. NO. 1647-100-DG-7565 | SHT. NO. 1 OF 1 | REV.

H:_doc\1647\Engineering & Technical\10_Pipeline\Mapping\DWG\Typicals\Environmental Use\1647-100-DG-7565-Environmental 20150421.DWG Plotted on: Apr 21, 2015 - 10:53am by bbrooks

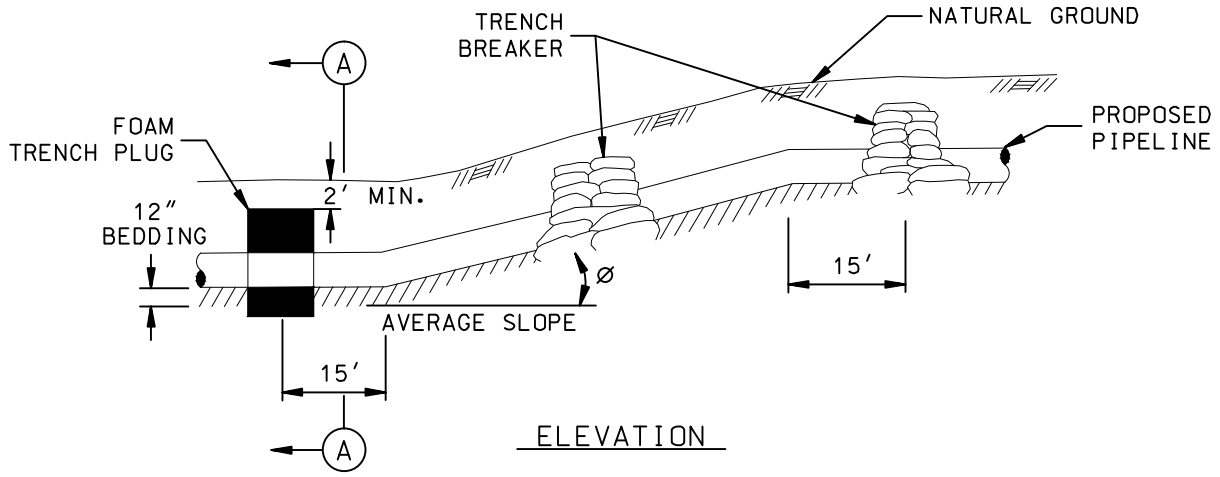

ELEVATION

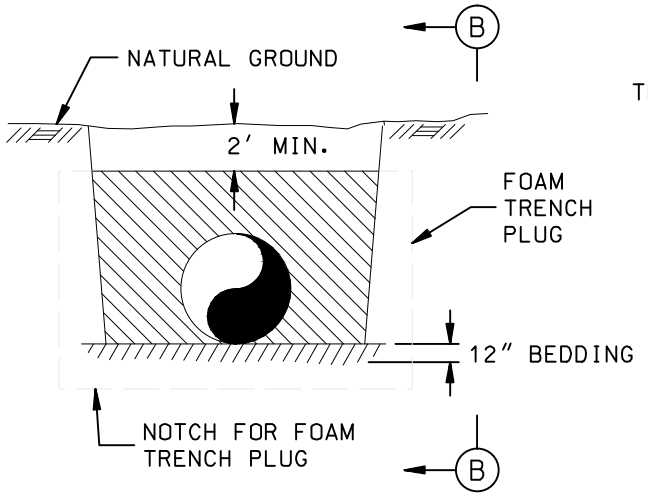

SECTION "A-A"

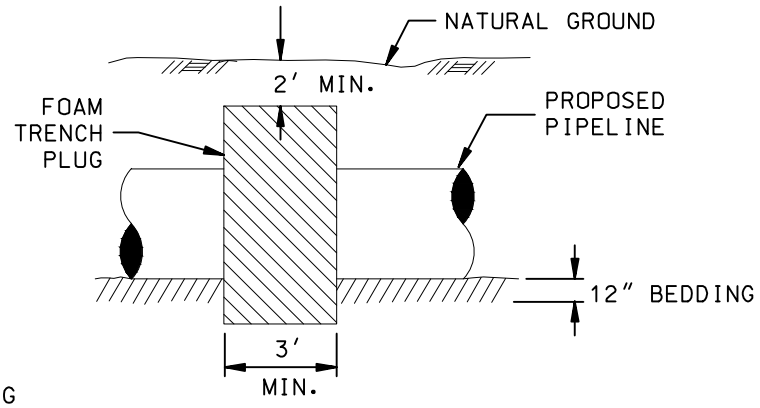

SECTION "B-B"

TRENCH BREAKER SPACING*	
GRADE, %	SPACING (FT)
0 - 5	NONE
5 - 15	300
15 - 30	200
>30	100

*SEE NOTE 6 FOR TRENCH PLUG SPACING

NOTES:

1. TRENCH BREAKER PLUGS SHALL BE INSTALLED AS SHOWN ON THIS DRAWING AT STREAM BANKS, WETLANDS, AND AT LOCATIONS DIRECTED BY COMPANY.
2. FOAM TRENCH PLUGS SHALL BE INSTALLED AT EACH END OF A PIPE TRENCH THROUGH THE WETLAND AND THE WETLAND/UPLAND EDGE OF A WETLAND ADJACENT TO A WETLAND ABUTTING THE WORKSPACE TO PREVENT DRAINAGE OF WETLANDS.
3. FOAM TRENCH PLUGS SHALL CONSIST OF 2-4 PCF URETHANE FOAM.
4. FOAM TRENCH PLUGS SHALL BE "NOTCHED" INTO THE SIDE WALLS AND BOTTOM OF THE TRENCH TO PREVENT SHIFTING.
5. THE TOP OF THE TRENCH BREAKER OR PLUG WILL NOT BE CLOSER THAN 2 FEET FROM THE RESTORED SURFACE EXCEPT IN ROCKY AREAS WHERE THE TOP OF THE TRENCH BREAKER OR PLUG WILL BE AT THE ADJACENT NATURAL ROCK LINE.
6. FOAM TRENCH PLUGS SHALL BE SPACED AS NOTED ABOVE SUBJECT TO SITE SPECIFIC ENVIRONMENTAL REQUIREMENTS AND MANUFACTURER'S RECOMMENDATIONS.

NO.	REVISION DESCRIPTION	BY	DATE	CHK'D	APP'D
		GIE	4-21-15	CN	TT

GULF INTERSTATE ENGINEERING

DWN. BY:	GIE	6-12-14
CHK.	JM	6-12-14
PROJ. ENGR.	VH	6-12-14
PROJ. MGR.	TT	6-12-14
CLIENT APP.		
SCALE:	N.T.S.	

Marathon Pipe Line LLC

PROPOSED CORNERSTONE PIPELINE

STANDARD PIPELINE
TRENCH BREAKERS AND PLUGS

DWG. NO. 1647-100-DG-7575 | SHT. NO. 1 OF 1 | REV.

H:_doc\1647\Engineering & Technical\10_Pipeline\Mapping\DWG\Typicals\Environmental Use\1647-100-DG-7575.DWG Plotted on: Apr 21, 2015 - 10:55am by bbrooks

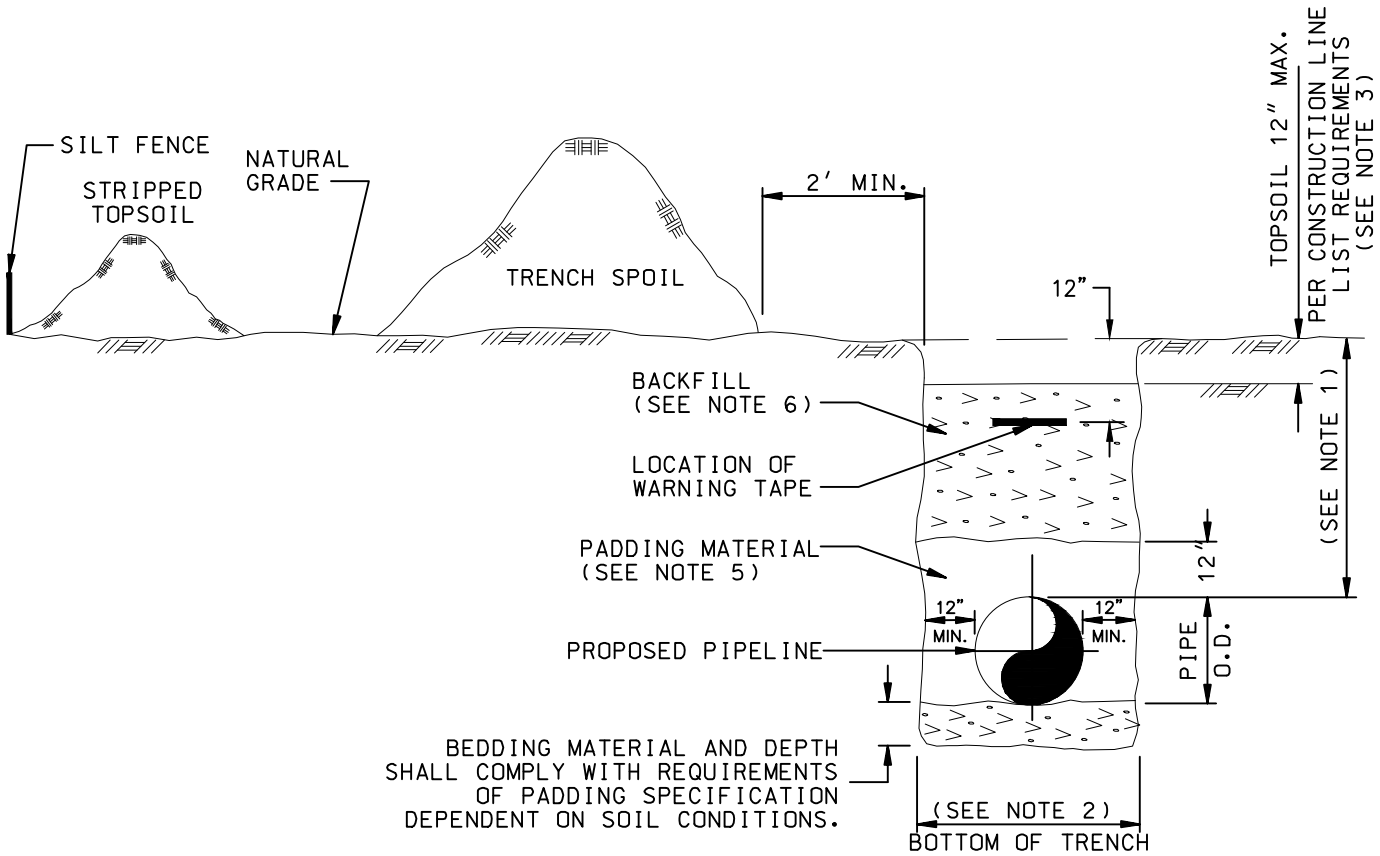

NOTES:

1. INSTALL WITH 48" MINIMUM COVER. EXCEPT WHERE NOTED.
2. BOTTOM OF TRENCH WIDTH TO BE A MINIMUM OF PIPE DIAMETER +2 FEET.
3. REMOVE ROCK GREATER THAN 3" IN DIAMETER FROM THE RIGHT-OF-WAY (MPL-CON-00140-SPE SEC. 2.1.7.)
4. LINE PIPE SHALL BE SUPPORTED WITH 4′ OF CONTACT EVERY 10′ AS PER MPL-CON-00140-SPE, SEC 2.1.4.
5. PADDING MATERIAL SHALL BE FREE OF ORGANIC MATERIAL AND CONSIST OF SOIL, SAND, OR CRUSHED ROCK THAT PASSES THROUGH A 1-1/2" SCREENING MECHANISM.
6. BACKFILL MATERIAL MAY INCLUDE TRENCH SPOIL AND OR IMPORTED MATERIAL THAT WILL PASS A 3-INCH SCREEN. ROCK THAT DOES NOT PASS THE 3-INCH SCREEN SHALL BE DISPOSED OF AS ALLOWED BY THE LAND OWNER.
7. SEE CONSTRUCTION SPECIFICATIONS FOR ADDITIONAL REQUIREMENTS.
8. NO VEGETATION, FROZEN SOIL, ICE, OR ORGANIC MATERIAL IS ALLOWED IN BEDDING, PADDING OR BACKFILL MATERIAL.

NO.	REVISION DESCRIPTION	BY	DATE	CHK'D	APP'D
		GIE	4-21-15	CN	TT

GULF INTERSTATE ENGINEERING

DWN. BY:	GIE	6-12-14
CHK.	JM	6-12-14
PROJ. ENGR.	VH	6-12-14
PROJ. MGR.	TT	6-12-14
CLIENT APP.		
SCALE:	N.T.S.	

Marathon Pipe Line LLC

PROPOSED CORNERSTONE PIPELINE

PIPELINE STANDARD DITCH & BACKFILL REQUIREMENTS
(W / BEDDING & PADDING)

DWG. NO.	SHT. NO.	REV.
1647-100-DG-7576	1 OF 1	

H:_doc\1647\Engineering & Technical\10_Pipeline\Mapping\DWG\Typicals\Environmental Use\1647-100-DG-7576.DWG Plotted on: Apr 21, 2015 - 10:56am by bbrooks

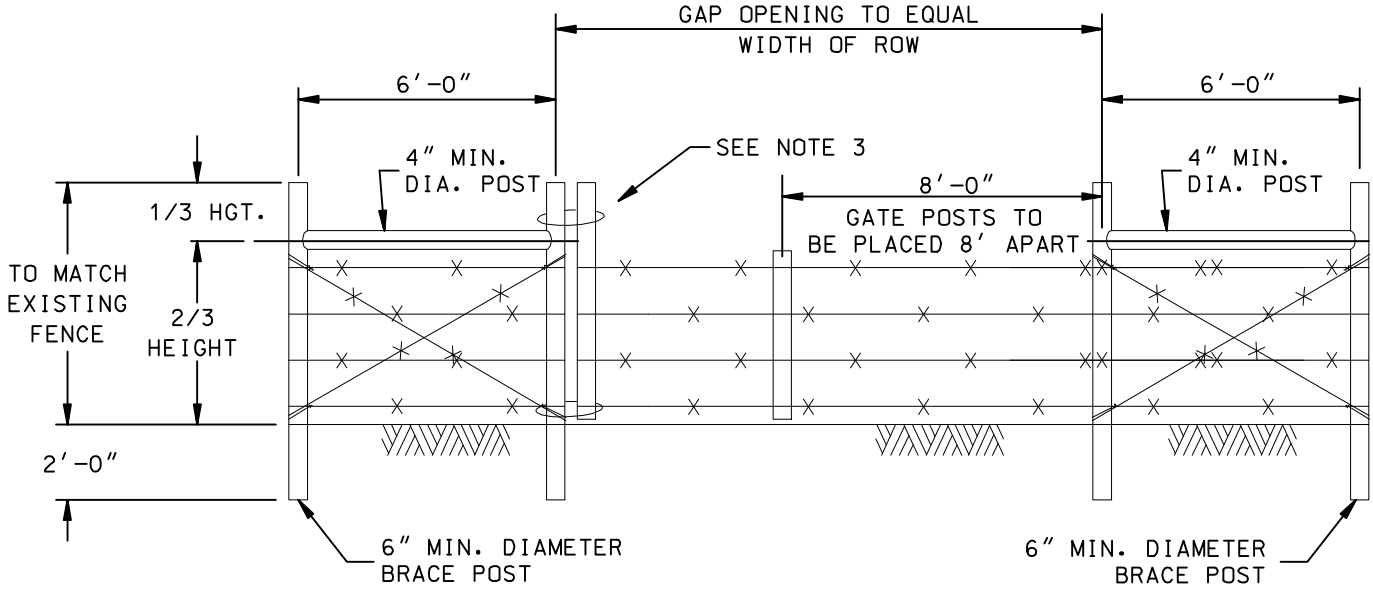

NOTES:

1. INSTALL BRACE POSTS AND SECURE FENCE BEFORE CUTTING EXISTING WIRES. REPLACEMENT FENCE TO BE EQUAL OR BETTER THAN EXISTING FENCE. ALL POSTS AND WIRE TO BE FURNISHED AND INSTALLED BY CONTRACTOR.

2. ALL POSTS TO BE ROUND WOODEN POSTS, CUT AND MANUFACTURED FROM LIVE, SOUND, AND GROWING TREES AND SHALL BE SOUTHERN YELLOW PINE, RED (NORWAY) PINE, WHITE PINE, OR JACK PINE, PRESSURE TREATED WITH PENTACHLOROPHENOL PRESERVATIVE. UNTREATED CEDAR POSTS MAY BE USED.

3. CATCH OFF OF FENCE STRETCHER TO BE PLACED THIS SIDE OF BRACE POST BEFORE CUTTING FENCE WIRE. CUT WIRE TO BE SECURED TO BRACE POST BY WRAPPING AROUND POST AND STAPLING WITH FENCE STAPLES.

NO.	REVISION DESCRIPTION	BY	DATE	CHK'D	APP'D
		GIE	4-21-15	CN	TT

GULF INTERSTATE ENGINEERING

DWN. BY:	GIE	6-12-14
CHK.	JM	6-12-14
PROJ. ENGR.	VH	6-12-14
PROJ. MGR.	TT	6-12-14
CLIENT APP.		
SCALE:	N.T.S.	

Marathon Pipe Line LLC

PROPOSED CORNERSTONE PIPELINE

TYPICAL FENCE BRACE POST DETAIL

DWG. NO.	SHT. NO.	REV.
1647-100-DG-7577	1 OF 1	

H:_doc\1647\Engineering & Technical\10_Pipeline\Mapping\DWG\Typicals\Environmental Use\1647-100-DG-7577.DWG Plotted on: Apr 21, 2015 - 10:57am by bbrooks

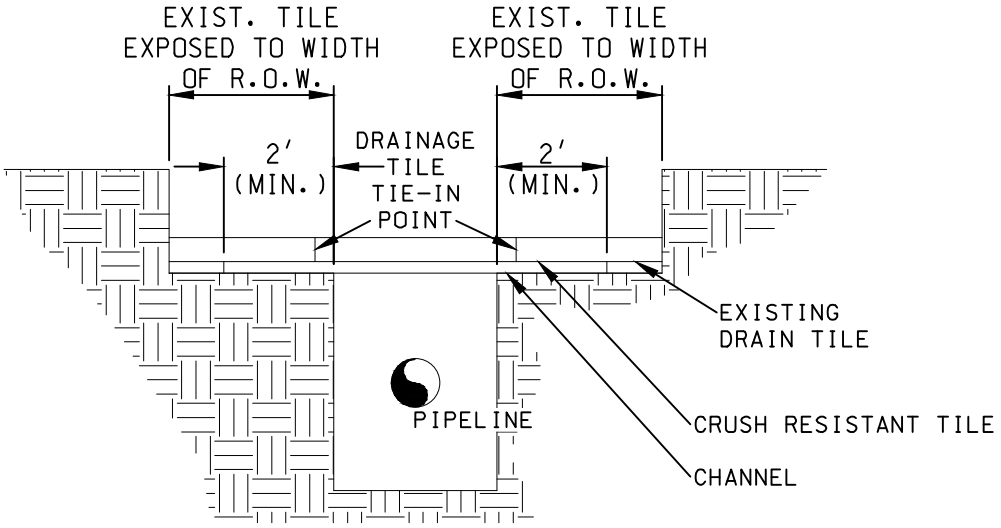

PROFILE VIEW

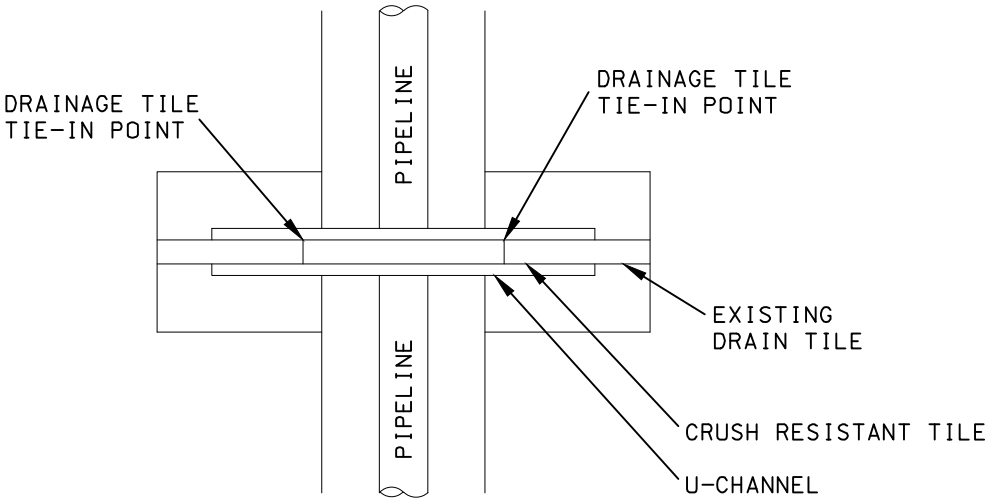

PLAN VIEW

NOTES:

1. U-CHANNEL SHOULD EXTEND UNDER EXISTING DRAIN TILE A MINIMUM OF 2′ WITH THE ENDS RESTING ON FIRM, COMPACTED SOIL.
2. FLEXIBLE FIELD DRAIN TILE SHOULD NOT BE USED IN THE REPLACEMENT.
3. STANDARD TILE CONNECTORS SHOULD BE USED TO TIE-IN THE NEW SECTION WITH THE EXISTING TILE.
4. SAND BAGS MAY BE USED FOR SUPPORT BETWEEN FIELD TILE AND PIPELINE, IF NEEDED.
5. DRAIN TILE MUST BE CRUSH RESISTANT TO MINIMUM OF 2000 LB.
6. MINIMUM CLEARANCE OF 4″ MUST BE MAINTAINED BETWEEN PIPE AND DRAIN TILE.

NO.	REVISION DESCRIPTION	BY	DATE	CHK'D	APP'D
		GIE	4-21-15	CN	TT

GULF INTERSTATE ENGINEERING

DWN. BY:	GIE	6-12-14
CHK.	JM	6-12-14
PROJ. ENGR.	VH	6-12-14
PROJ. MGR.	TT	6-12-14
CLIENT APP.		
SCALE:	N.T.S.	

Marathon Pipe Line LLC

PROPOSED CORNERSTONE PIPELINE

DRAINAGE TILE
REPLACEMENT INSTALLATION

DWG. NO.	SHT. NO.	REV.
1647-100-DG-7578	1 OF 1	

H:_doc\1647\Engineering & Technical\10_Pipeline\Mapping\DWG\Typicals\Environmental Use\1647-100-DG-7578.DWG Plotted on: Apr 21, 2015 - 10:58am by bbrooks

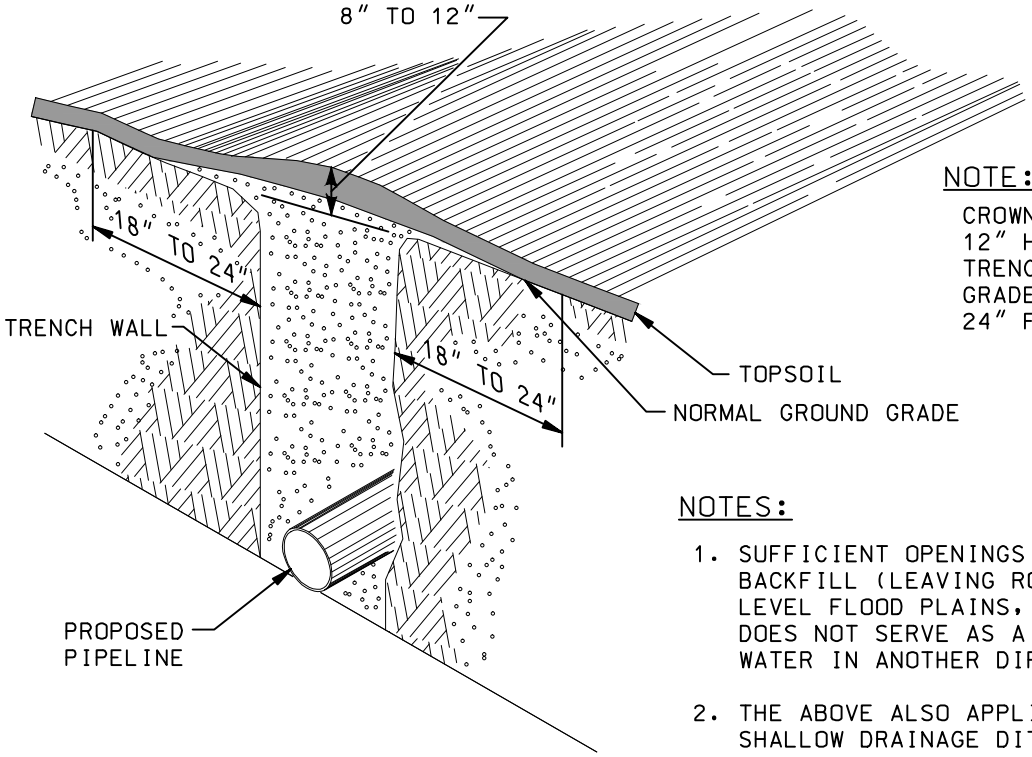

NOTE:

CROWN OF BACKFILL TO BE 8" TO 12" HIGH OVER CENTER LINE OF TRENCH AND FEATHERED OUT TO GRADE AT A DISTANCE OF 18" TO 24" FROM TRENCH WALL.

NOTES:

1. SUFFICIENT OPENINGS SHOULD BE LEFT IN THE BACKFILL (LEAVING ROW LEVEL) IN AREAS OF LEVEL FLOOD PLAINS, SO THAT THE BACKFILL DOES NOT SERVE AS A BREAKER TO TURN THE WATER IN ANOTHER DIRECTION.
2. THE ABOVE ALSO APPLIES TO BED FURROWS AND SHALLOW DRAINAGE DITCHES, OFTEN ENCOUNTERED IN FLAT LEVEL COUNTRY. THEY SHOULD ALWAYS BE LEFT WITH NO CROWN.
3. MINOR BERMING OR CROWN SHOULD BE CONSIDERED IN WETLANDS AREAS.

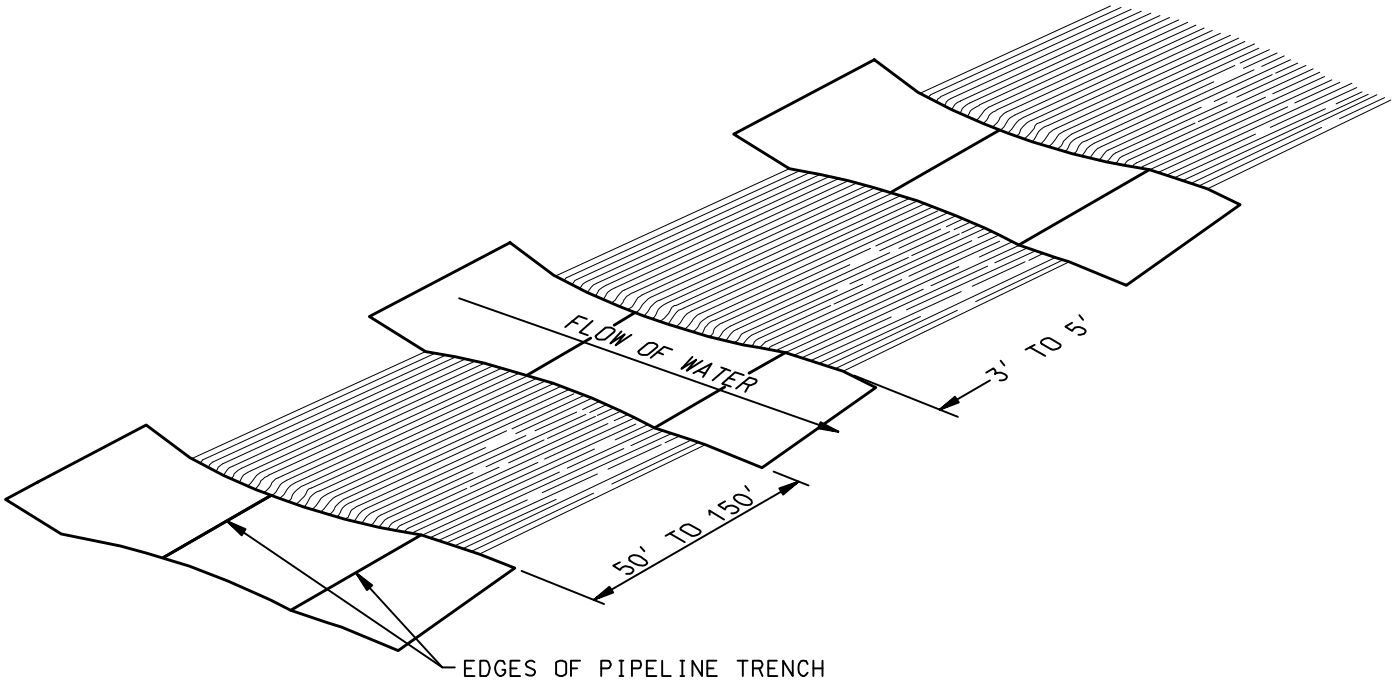

NO.	REVISION DESCRIPTION	BY	DATE	CHK'D	APP'D
		GIE	4-21-15	CN	TT

GULF INTERSTATE ENGINEERING

DWN. BY:	GIE	6-12-14
CHK.	JM	6-12-14
PROJ. ENGR.	VH	6-12-14
PROJ. MGR.	TT	6-12-14
CLIENT APP.		
SCALE:	N.T.S.	

Marathon Pipe Line LLC

PROPOSED CORNERSTONE PIPELINE

BEST MANAGEMENT PRACTICES FOR CROWNING ROW WITHIN AGRICULTURAL LANDS

DWG. NO.	SHT. NO.	REV.
1647-100-DG-7579	1 OF 1	

H:_doc\1647\Engineering & Technical\10_Pipeline\Mapping\DWG\Typicals\Environmental Use\1647-100-DG-7579.DWG Plotted on: Apr 21, 2015 - 10:59am by bbrooks

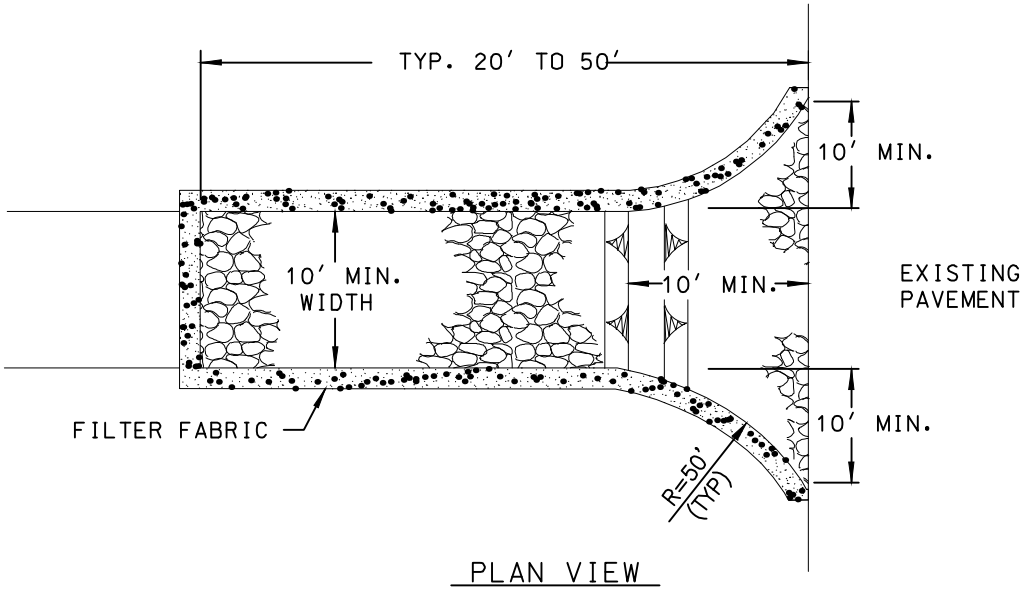

PLAN VIEW

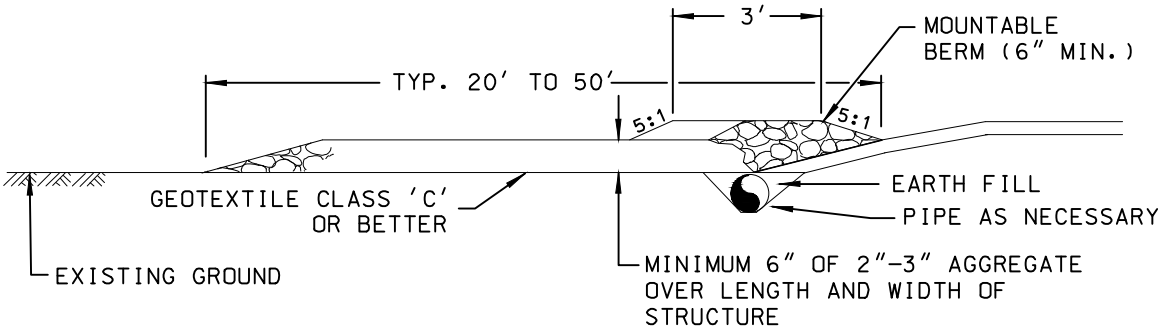

PROFILE

NO.	REVISION DESCRIPTION	BY	DATE	CHK'D	APP'D
		GIE	4-21-15	CN	TT

GULF INTERSTATE ENGINEERING

DWN. BY:	GIE	6-12-14
CHK.	JM	6-12-14
PROJ. ENGR.	VH	6-12-14
PROJ. MGR.	TT	6-12-14
CLIENT APP.		
SCALE:	N.T.S.	

Marathon Pipe Line LLC

PROPOSED CORNERSTONE PIPELINE

TYPICAL CONSTRUCTION ENTRANCES

DWG. NO.	SHT. NO.	REV.
1647-100-DG-7580	1 OF 1	

H:_doc\1647\Engineering & Technical\10_Pipeline\Mapping\DWG\Typicals\Environmental Use\1647-100-DG-7580.DWG Plotted on: Apr 21, 2015 - 11:00am by bbrooks

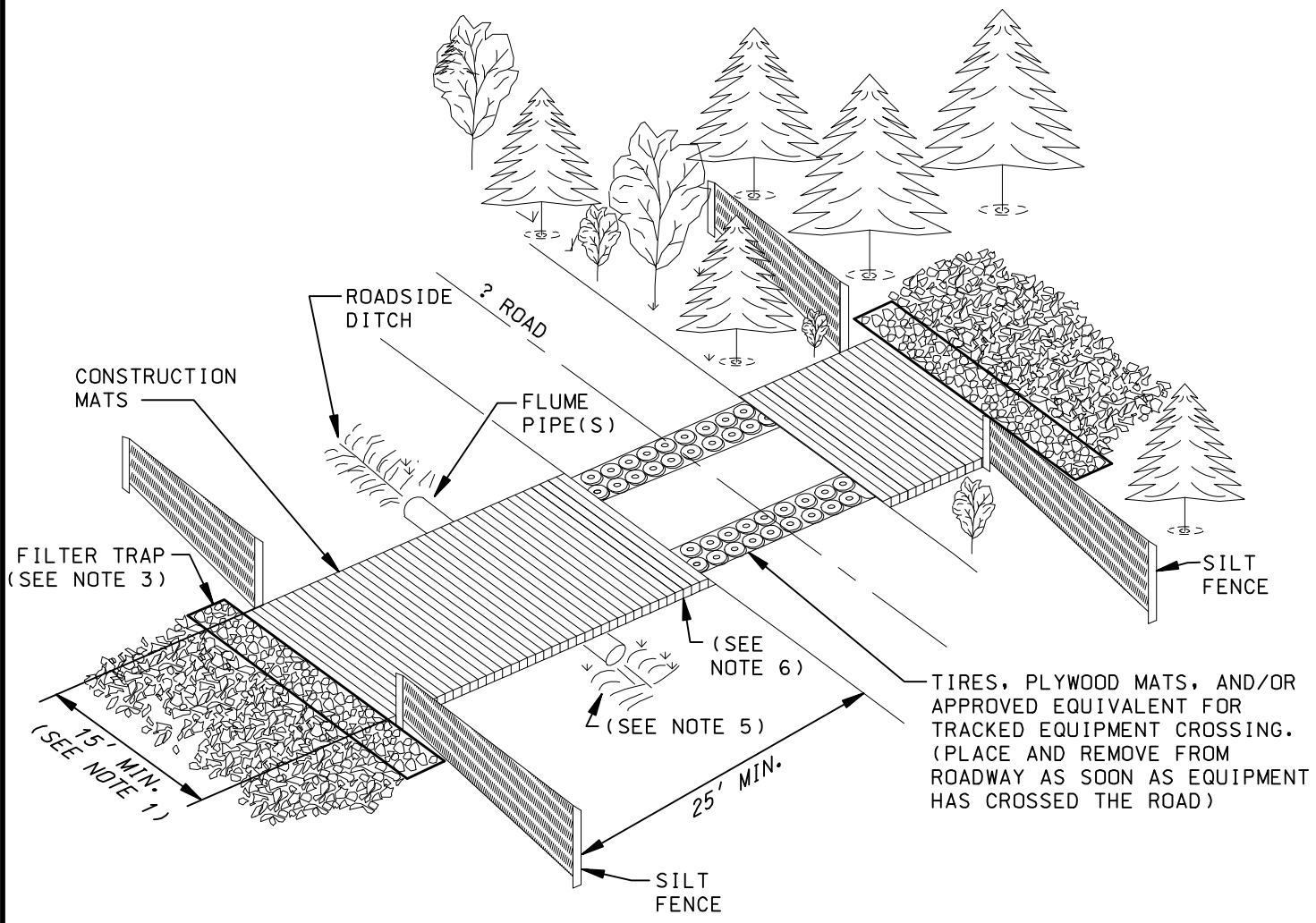

NOTES:

1. THIS DRAWING FOR SINGLE USE CONSTRUCTION SPREAD ROAD CROSSING. SEE TYPICAL CONSTRUCTION ENTRANCES DETAIL 1647-100-DG-7580 FOR ENTRANCE AND EXIT OF VEHICLES AND EQUIPMENT FROM PUBLIC ROADS.
2. MATS TO BE UTILIZED IN AGRICULTURAL AREAS. CRUSHED STONE WITH FABRIC MAT TO BE UTILIZED IN NON-AGRICULTURAL AREAS.
3. RAMP SHALL BE REMOVED AS QUICKLY AS PRACTICAL AFTER CONSTRUCTION ACTIVITIES HAVE BEEN COMPLETED.
4. CONSTRUCT A 2' (MIN.) WIDE X 1' (MIN.) DEEP TRENCH THAT EXTENDS 2' BEYOND BOTH SIDES OF THE VEHICLE OPENING THAT IS FILLED WITH 6" STONE TO BE USED AS A SEDIMENT FILTER TRAP. GEOTEXTILE FABRIC MAY BE USED UNDER THE ROCK.
5. CONTRACTOR SHALL FOLLOW ALL STATE AND FEDERAL REGULATIONS CONCERNING SIGNAGE AND FLAG PERSONS FOR MOVEMENT OF EQUIPMENT ACROSS ROADWAYS.
6. USE SAND BAGS AS NECESSARY TO SUPPORT MATS AND FLUME PIPE.
7. INSTALL MATS FLUSH WITH EDGE OF ROAD. DO NOT CUT SIDE OF BANKS. DO NOT PLACE DITCH CROSSING MATS ON PAVEMENT.
8. ANY ROAD REPAIR TO BE COMPLETED AT CONTRACTOR'S EXPENSE.

NO.	REVISION DESCRIPTION	BY	DATE	CHK'D	APP'D
		GIE	4-21-15	CN	TT

GULF INTERSTATE ENGINEERING

DWN. BY:	GIE	6-12-14
CHK.	JM	6-12-14
PROJ. ENGR.	VH	6-12-14
PROJ. MGR.	TT	6-12-14
CLIENT APP.		
SCALE:	N.T.S.	

Marathon Pipe Line LLC

PROPOSED CORNERSTONE PIPELINE

TYPICAL PAVED ROAD EQUIPMENT CROSSING DETAILS

DWG. NO. 1647-100-DG-7581 | SHT. NO. 1 OF 1 | REV.

H:_doc\1647\Engineering & Technical\10_Pipeline\Mapping\DWG\Typicals\Environmental Use\1647-100-DG-7581.DWG Plotted on: Apr 21, 2015 - 11:01am by bbrooks

SIZE (IN.)	'C' (NO OF ROWS)	CIRCUMFERENCE OF FINISHED ROPE LOOPS (IN.)
8	9	30
12	6	44
16	5	54

ROPE INSTALLATION

ROPE SPACING SHOULD BE A MAXIMUM OF 6 FT. FROM THE PIPE ENDS AND A MAXIMUM OF 6 FT. FROM GIRTH WELDS. THE INTERVALS BETWEEN RINGS SHOULD BE BETWEEN 10 FT AND 26 FT. THE INTERVALS MUST BE ADJUSTED TO ENSURE THERE IS NO PIPE TO PIPE CONTACT. ROPE ENDS SHALL BE FUSED WITH A BLOW TORCH PRIOR TO SLIPPING THE LOOP OVER THE PIPE.

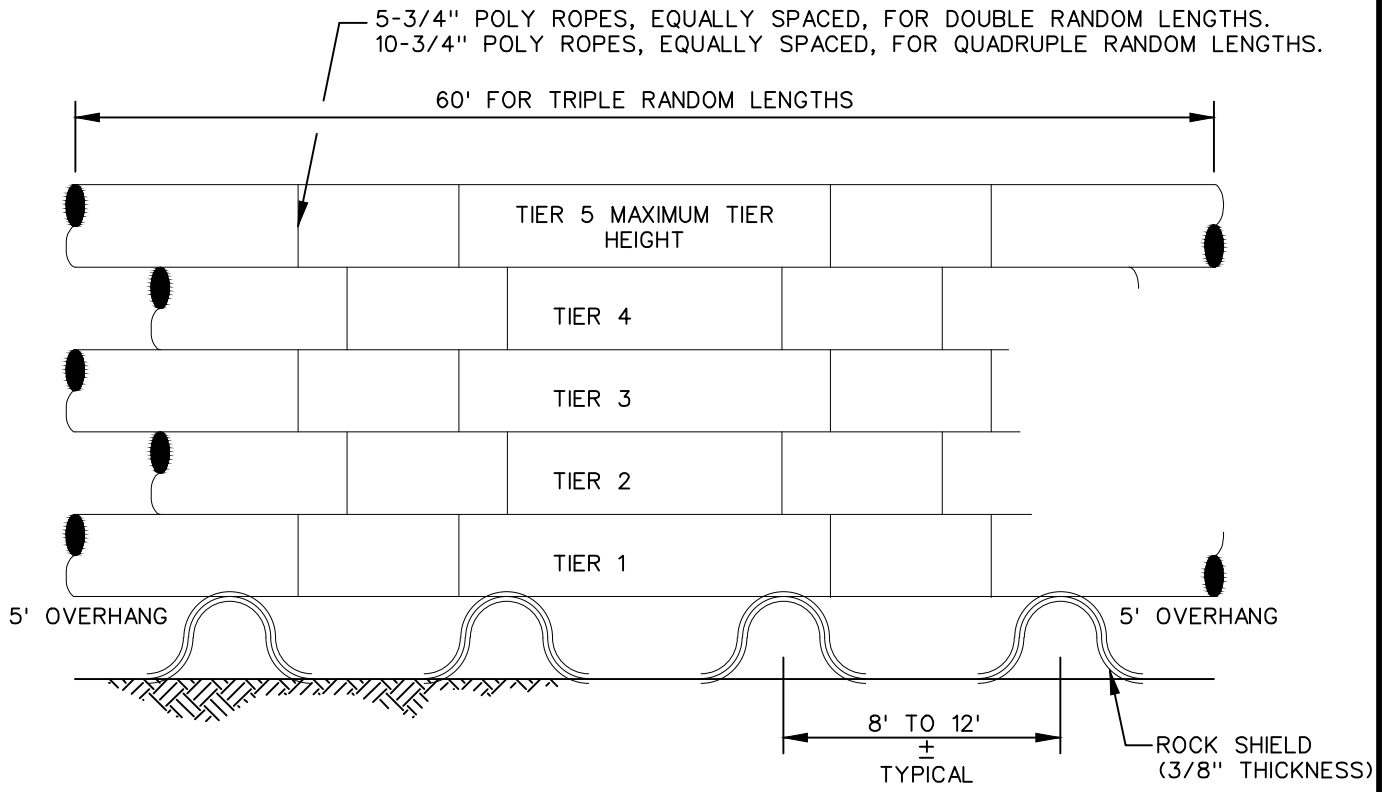

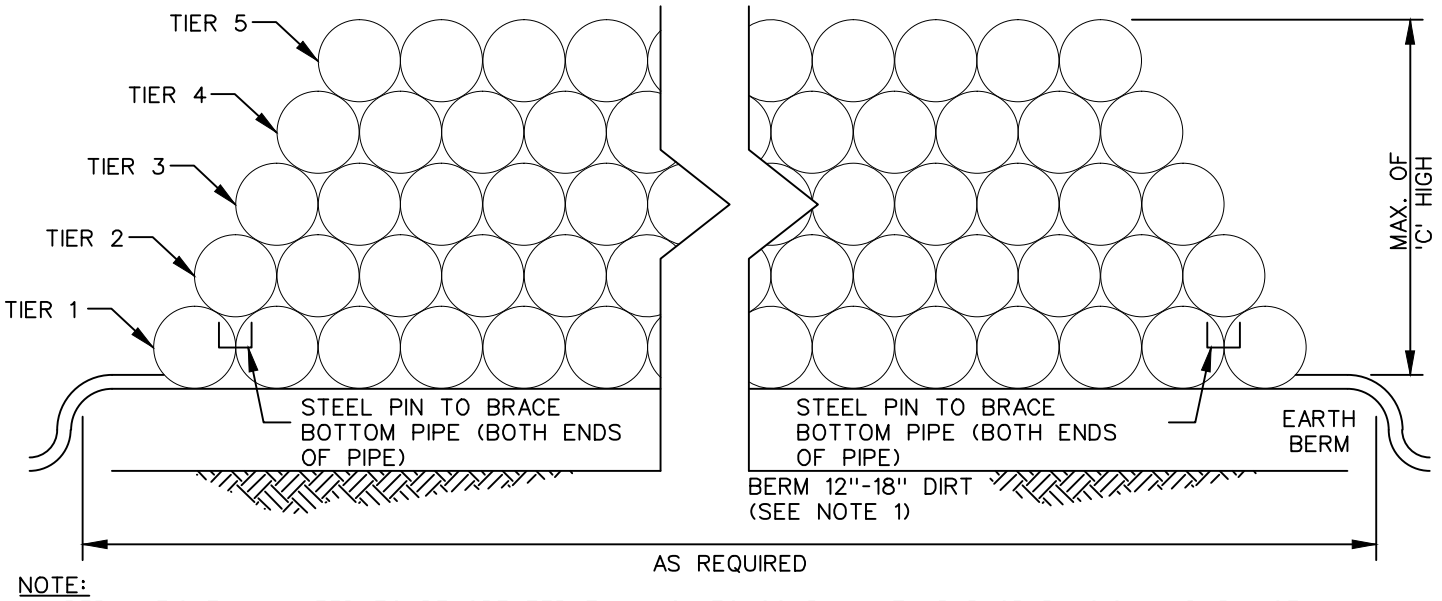

NOTE:

1. BERM HEIGHT MAY NEED TO BE GREATER THAN 18" TO COMPLY WITH PARAGRAPH 8.2.1 AND 5.4 OF MARATHON'S SPECIFICATION FOR HANDING, STORAGE AND SHIPPING OF PIPE. TIMBERS MAY BE USED INSTEAD OF BERMS. SEE PARAGRAPH 8.3 OF SPECIFICATION HANDING, STORAGE AND SHIPPING OF PIPE.

NO.	REVISION DESCRIPTION	BY	DATE	CHK'D	APP'D
		GIE	4-21-15	YA	TT

GULF INTERSTATE ENGINEERING

Marathon Pipe Line LLC

DWN. BY:	GIE	2-24-15
CHK.	JM	2-24-15
PROJ. ENGR.	MR	2-25-15
PROJ. MGR.	TT	2-25-15
CLIENT APP.		
SCALE:	N.T.S.	

PROPOSED CORNERSTONE PIPELINE

DETAIL FOR TYPICAL "BERM" PIPE STACKING / STORAGE

DWG. NO. 1647-100-DG-7585 | SHT. NO. 1 OF 1 | REV.

H:_doc\1647\Engineering & Technical\10_Pipeline\Mapping\DWG\Typicals\Environmental Use\1647-100-DG-7585.DWG Plotted on: Apr 21, 2015 - 11:03am by bbrooks

SIZE (IN.)	'C' (NO OF ROWS)	CIRCUMFERENCE OF FINISHED ROPE LOOPS (IN.)
8	9	30
12	6	44
16	5	54

ROPE INSTALLATION

ROPE SPACING SHOULD BE A MAXIMUM OF 6 FT. FROM THE PIPE ENDS AND A MAXIMUM OF 6 FT. FROM GIRTH WELDS. THE INTERVALS BETWEEN RINGS SHOULD BE BETWEEN 10 FT AND 26 FT.. THE INTERVALS MUST BE ADJUSTED TO ENSURE THERE IS NO PIPE TO PIPE CONTACT. ROPE ENDS SHALL BE FUSED WITH A BLOW TORCH PRIOR TO SLIPPING THE LOOP OVER THE PIPE.

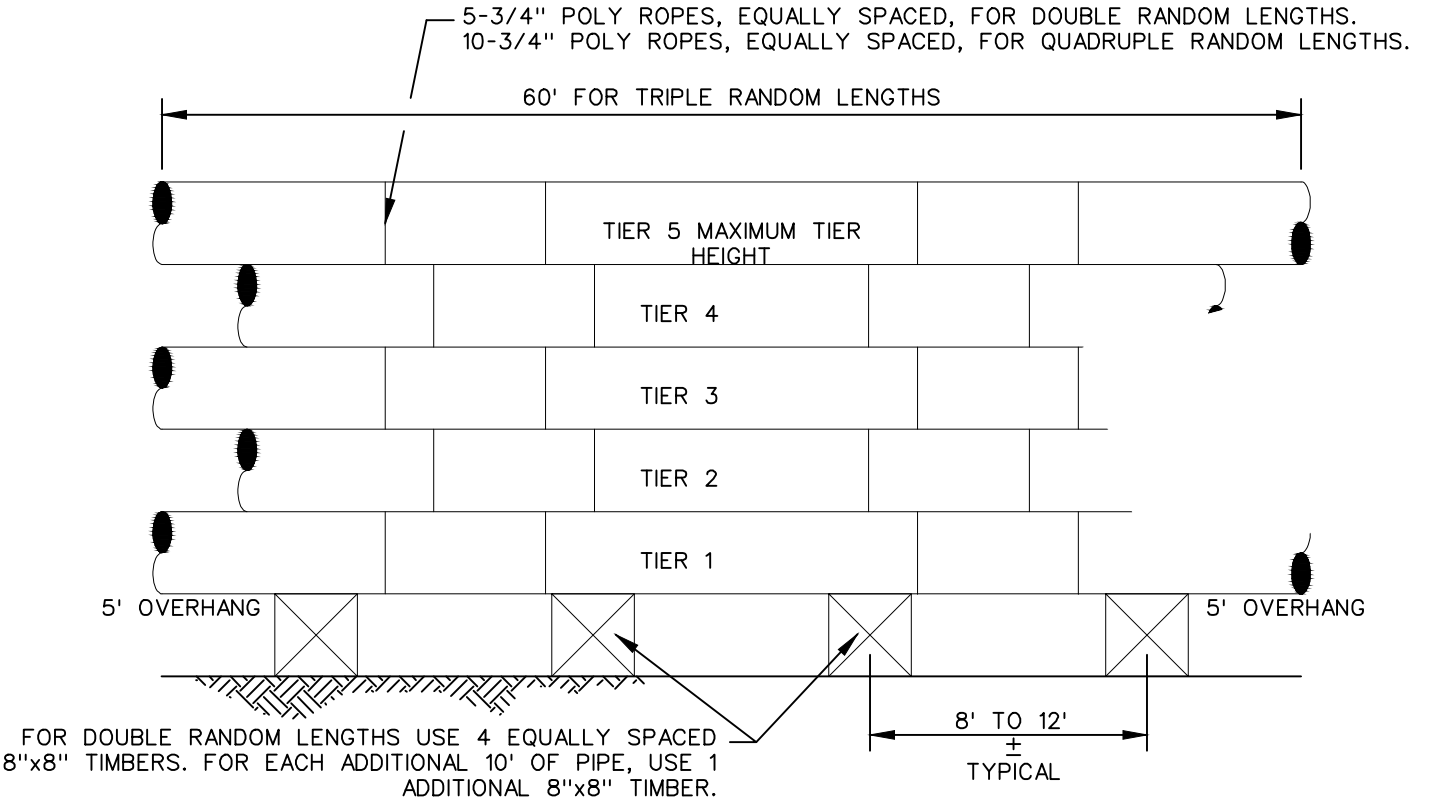

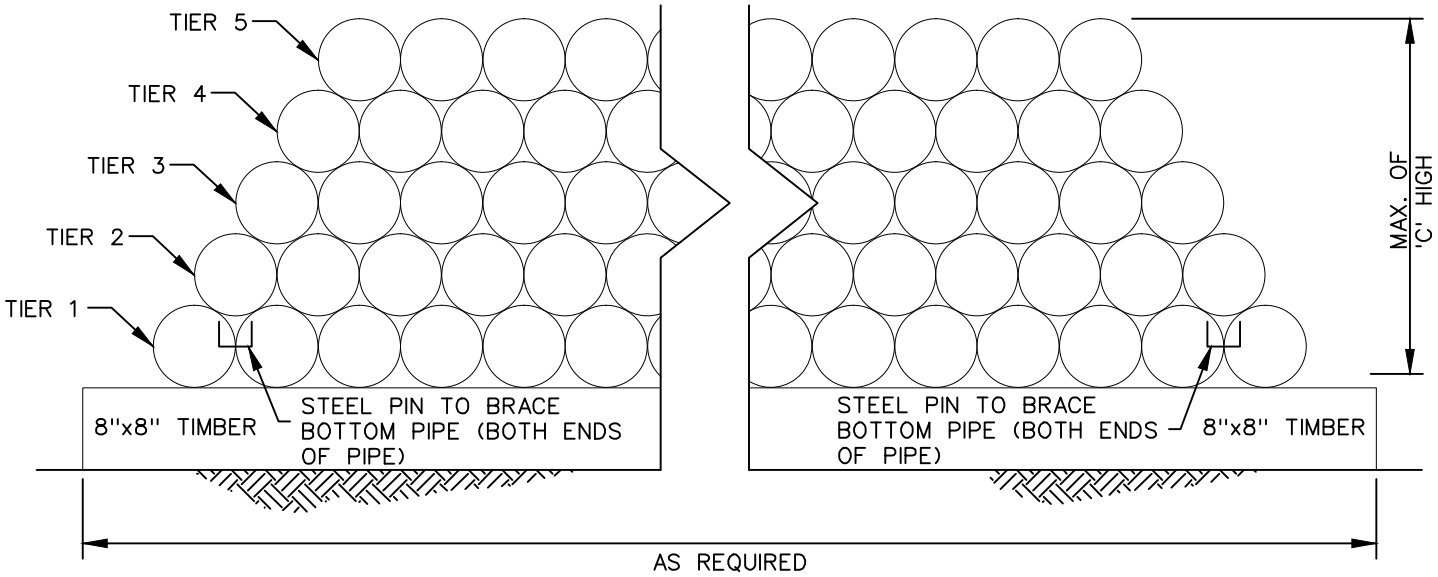

NOTE:

1. REFER TO MARATHON'S SPECIFICATION FOR HANDLING, SHIPPING, RECEIVING/REPORTING, AND STORAGE OF PIPE FOR ADDITIONAL INFORMATION.

NO.	REVISION DESCRIPTION	BY	DATE	CHK'D	APP'D
		GIE	4-21-15	YA	TT

GULF INTERSTATE ENGINEERING

Marathon Pipe Line LLC

DWN. BY:	GIE	3-2-15
CHK.	JM	3-2-15
PROJ. ENGR.	MR	3-3-15
PROJ. MGR.	TT	3-3-15
CLIENT APP.		
SCALE:	N.T.S.	

PROPOSED CORNERSTONE PIPELINE

DETAIL FOR TYPICAL "TIMBER" PIPE STACKING / STORAGE

DWG. NO. 1647-100-DG-7586 | SHT. NO. 1 OF 1 | REV.

H:_doc\1647\Engineering & Technical\10_Pipeline\Mapping\DWG\Typicals\Environmental Use\1647-100-DG-7586.DWG Plotted on: Apr 21, 2015 - 11:03am by bbrooks

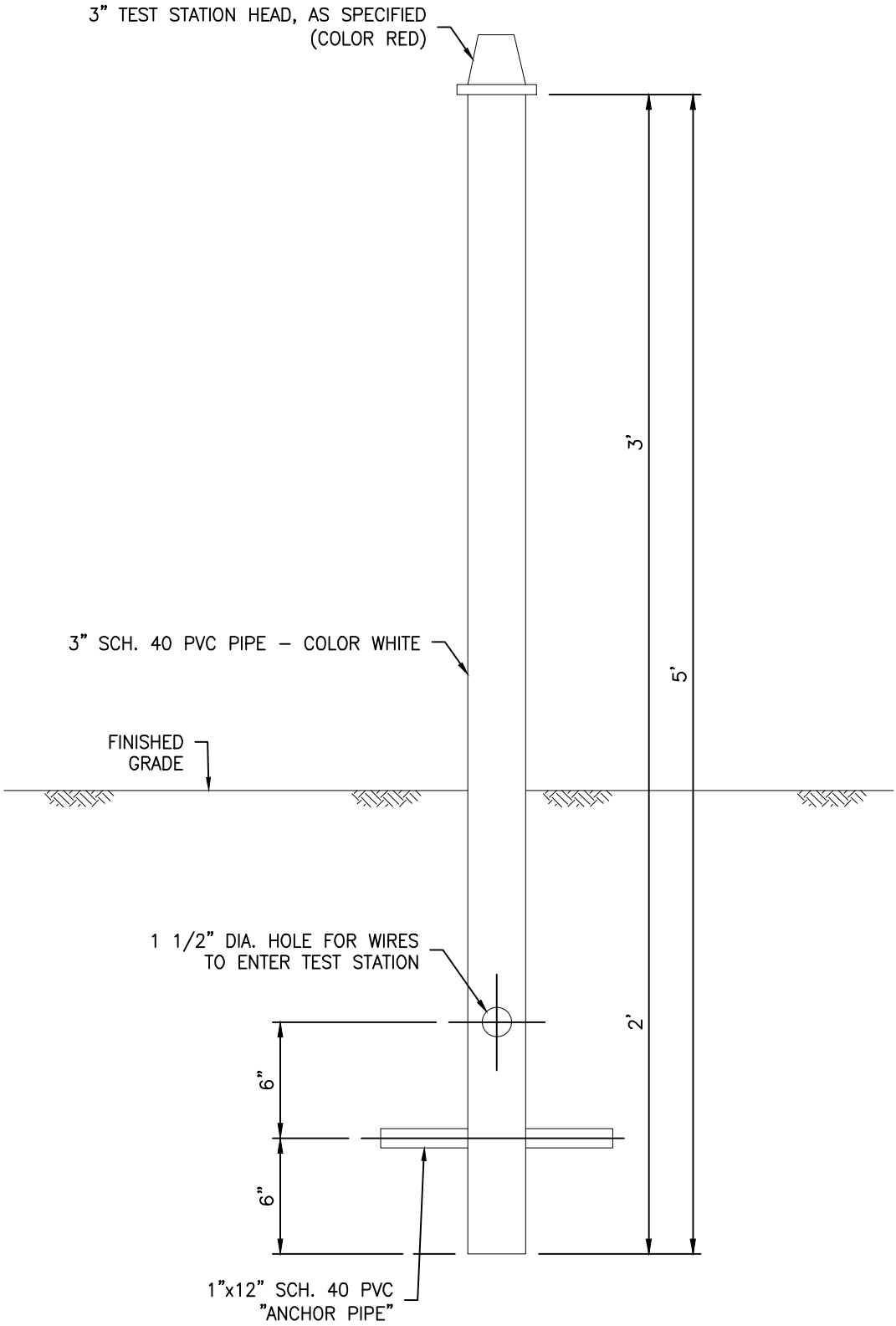

NO.	REVISION DESCRIPTION	BY	DATE	CHK'D	APP'D
		GIE	4–21–15	CN	TT

GULF INTERSTATE ENGINEERING

DWN. BY:	GIE	6–12–14
CHK.	JM	6–12–14
PROJ. ENGR.	VH	6–12–14
PROJ. MGR.	TT	6–12–14
CLIENT APP.		
SCALE:	N.T.S.	

Marathon Pipe Line LLC

PROPOSED CORNERSTONE PIPELINE

TYPICAL CATHODIC PROTECTION
TEST STATION POST DETAIL

DWG. NO.	SHT. NO.	REV.
1647-100-DG-7590	1 OF 1	

H:_doc\1647\Engineering & Technical\10_Pipeline\Mapping\DWG\Typicals\Environmental Use\1647-100-DG-7590.DWG Plotted on: Apr 21, 2015 – 11:06am by bbrooks

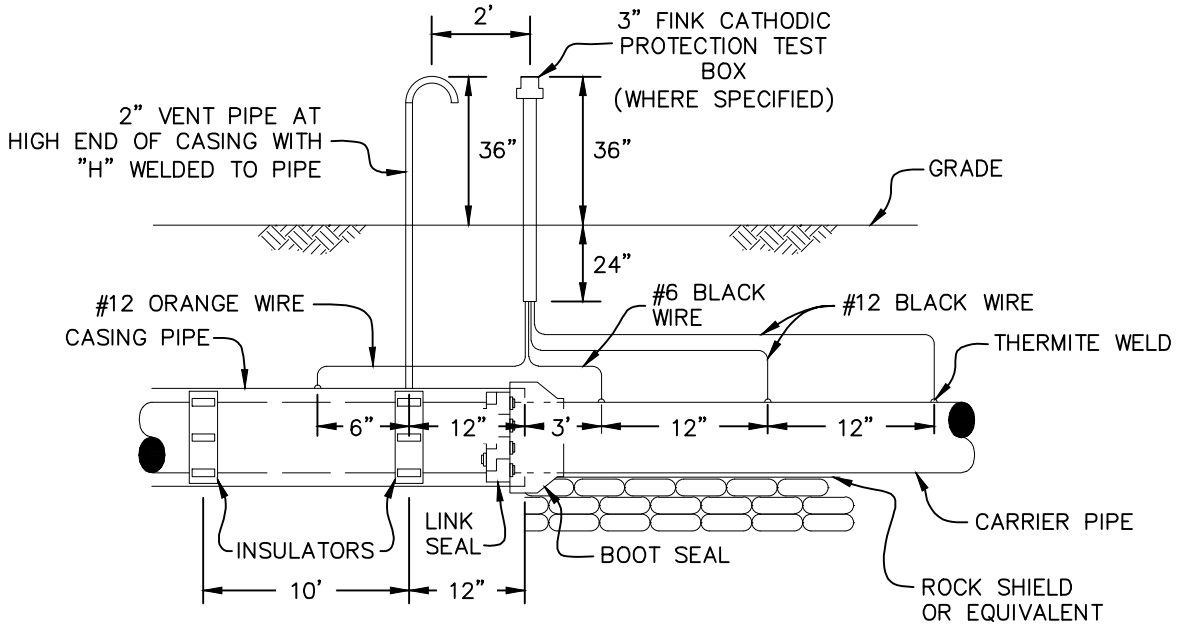

CASED INSTALLATION

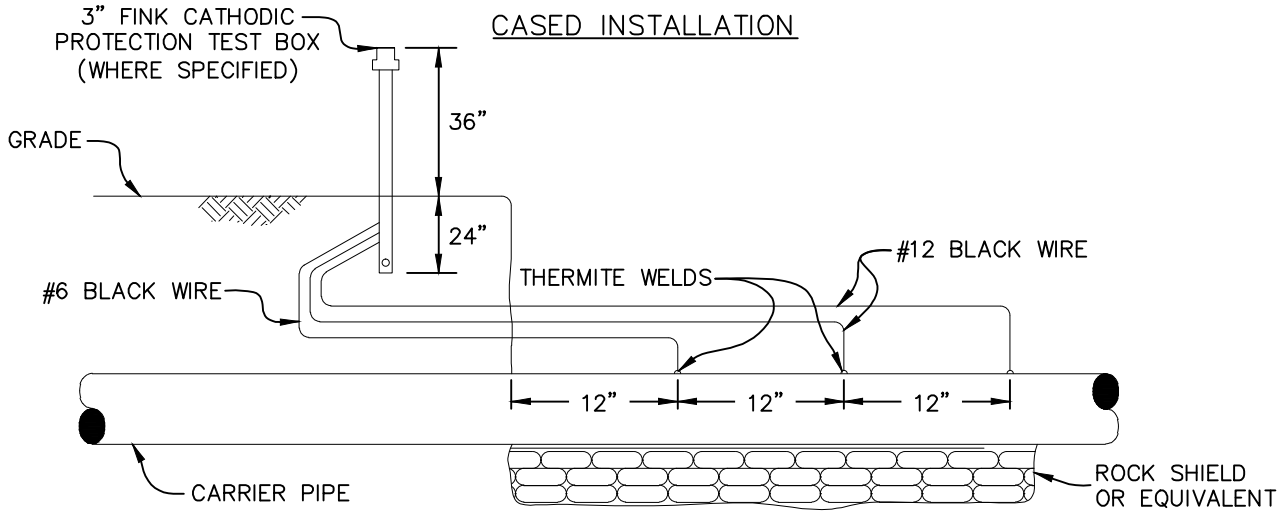

UN-CASED INSTALLATION

NOTES:

1. THERMITE WELDING PROCEDURE IS AS FOLLOWS:
   a. REMOVE PIPE COATING FROM AN AREA APPROXIMATELY 4"x4" FOR SINGLE WELD, LARGER FOR NUMEROUS CONNECTIONS.
   b. SCRAPE CLEAN AN AREA OF PIPE APPROXIMATELY 2"x2" TO BRIGHT STEEL "WHITE METAL" CONDITION WITH RASP AND FILE.
   c. STRIP APPROXIMATELY 2" OF CABLE INSULATION.
   d. PLACE MOLD FIRMLY ON CLEANED STEEL SURFACE AND INSERT WIRE.
   e. PLACE DISK IN MOLD AND SQUEEZE CARTRIDGE POWDER INTO MOLD CAVITY.
   f. IGNITE CHARGE (15 GRAM MAX.) WITH FLINT GUN. REMOVE MOLD AFTER 30 SECONDS. REMOVE SLAG AND SHARP EDGES.
   g. STRIKE COMPLETED CONNECTION FIRMLY WITH 3 LB. HAMMER TO ENSURE A GOOD CONNECTION.
2. CADWELD MOLDS ARE GOOD FOR APPROXIMATELY 50 CONNECTIONS.
3. IF A THERMITE WELD MUST BE REPEATED, A NEW PIPE SURFACE MUST BE PREPARED AT LEAST 3' FROM THE ORIGINAL WELD ATTEMPT.
4. COATING REPAIRS SHALL USE TAPECOAT GRAY PAD OR APPROVED EQUAL.
5. USE COPPER SLEEVE WHEN USING #10 OR #12 AWG WIRE.
6. #12 WIRE TO BE AWG SOLID COPPER WITH THW, THNN, OR THWN INSULATION (COLOR AS IDENTIFIED), OR #6 WIRE TO BE AWG STRANDED COPPER WITH THW, THNN, OR THWN INSULATION (COLOR AS IDENTIFIED).

NO.	REVISION DESCRIPTION	BY	DATE	CHK'D	APP'D
		GIE	4-21-15	CN	TT

GULF INTERSTATE ENGINEERING

Marathon Pipe Line LLC

DWN. BY:	GIE	6-12-14
CHK.	JM	6-12-14
PROJ. ENGR.	VH	6-12-14
PROJ. MGR.	TT	6-12-14
CLIENT APP.		
SCALE:	N.T.S.	

PROPOSED CORNERSTONE PIPELINE

TYPICAL CATHODIC PROTECTION CABLE TO PIPE CONNECTION CASED AND UN-CASED INSTALLATION

DWG. NO. 1647-100-DG-7591 | SHT. NO. 1 OF 1 | REV.

H:_doc\1647\Engineering & Technical\10_Pipeline\Mapping\DWG\Typicals\Environmental Use\1647-100-DG-7591.DWG Plotted on: Apr 21, 2015 - 11:07am by bbrooks

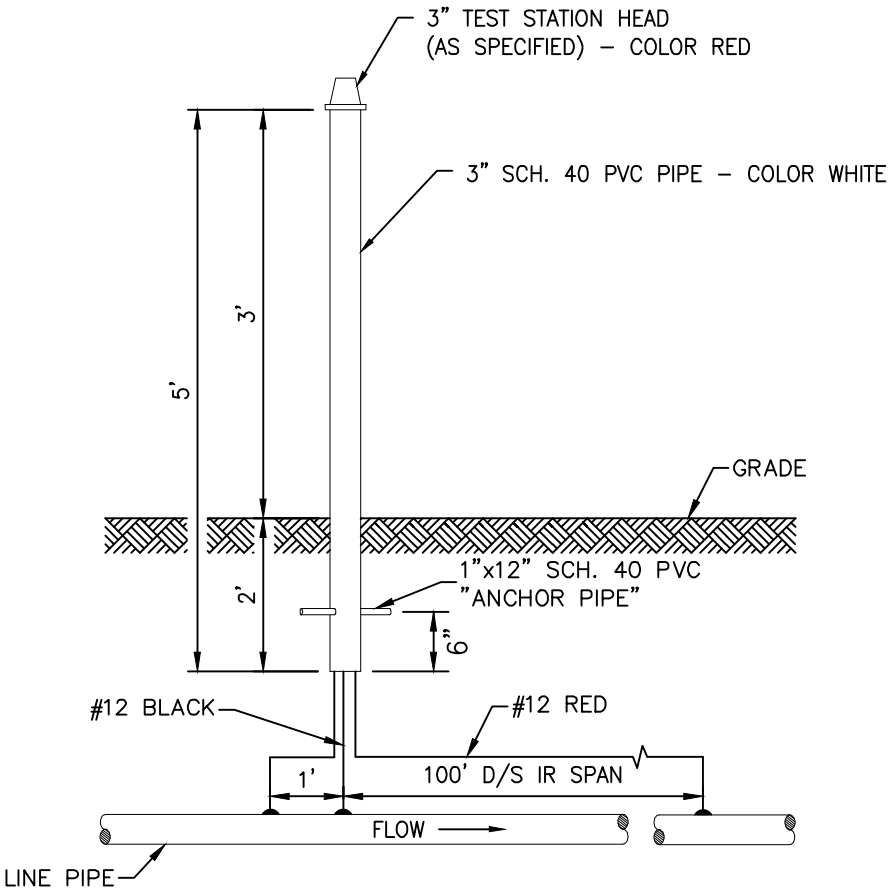

NOTES:

1. TEST STATION TO BE SET DIRECTLY OVER PIPE.
2. ABOVE INDICATES 100' DOWNSTREAM IR SPAN. IF UPSTREAM IR SPAN IS REQUIRED, REPLACE #12 RED WITH #12 GREEN 100' UPSTREAM OF #12 BLACK.
3. UPSTREAM AND/OR DOWNSTREAM 100 FT. IR SPANS WILL TYPICALLY NOT BE INSTALLED ON AN EXISTING PIPELINE UNLESS A SUFFICIENT AMOUNT OF PIPE IS EXPOSED, OR IF THEY ARE SPECIFICALLY REQUIRED. WHEN IR SPAN IS NOT INSTALLED, THEN INSTALL TWO, INSTEAD OF ONE, #12 BLACK WIRES 12" APART.
4. ALL WIRE TO BE PROVIDED BY CONTRACTOR.
5. ALL WIRE CONNECTIONS TO PIPE TO BE BY EXOTHERMIC WELD (e.g., CADWELD), UNLESS OTHERWISE SPECIFIED.

NO.	REVISION DESCRIPTION	BY	DATE	CHK'D	APP'D
		GIE	4–21–15	YA	TT

GULF INTERSTATE ENGINEERING

Marathon Pipe Line LLC

DWN. BY:	GIE	3–13–15
CHK.	GRM	3–16–15
PROJ. ENGR.	YA	–
PROJ. MGR.	TT	–
CLIENT APP.		
SCALE:	N.T.S.	

PROPOSED CORNERSTONE PIPELINE
TYPICAL CATHODIC PROTECTION CABLE
TO PIPE CONNECTION, CASED & UN-CASED,
INSTALLED AT PROPERTY LINES,
ROADS, WATERWAYS, FENCES, ETC.

DWG. NO.	SHT. NO.	REV.
1647-100-DG-7592	1 OF 1	

H:_doc\1647\Engineering & Technical\10_Pipeline\Mapping\DWG\Typicals\Environmental Use\1647-100-DG-7592.DWG Plotted on: Apr 21, 2015 – 11:08am by bbrooks

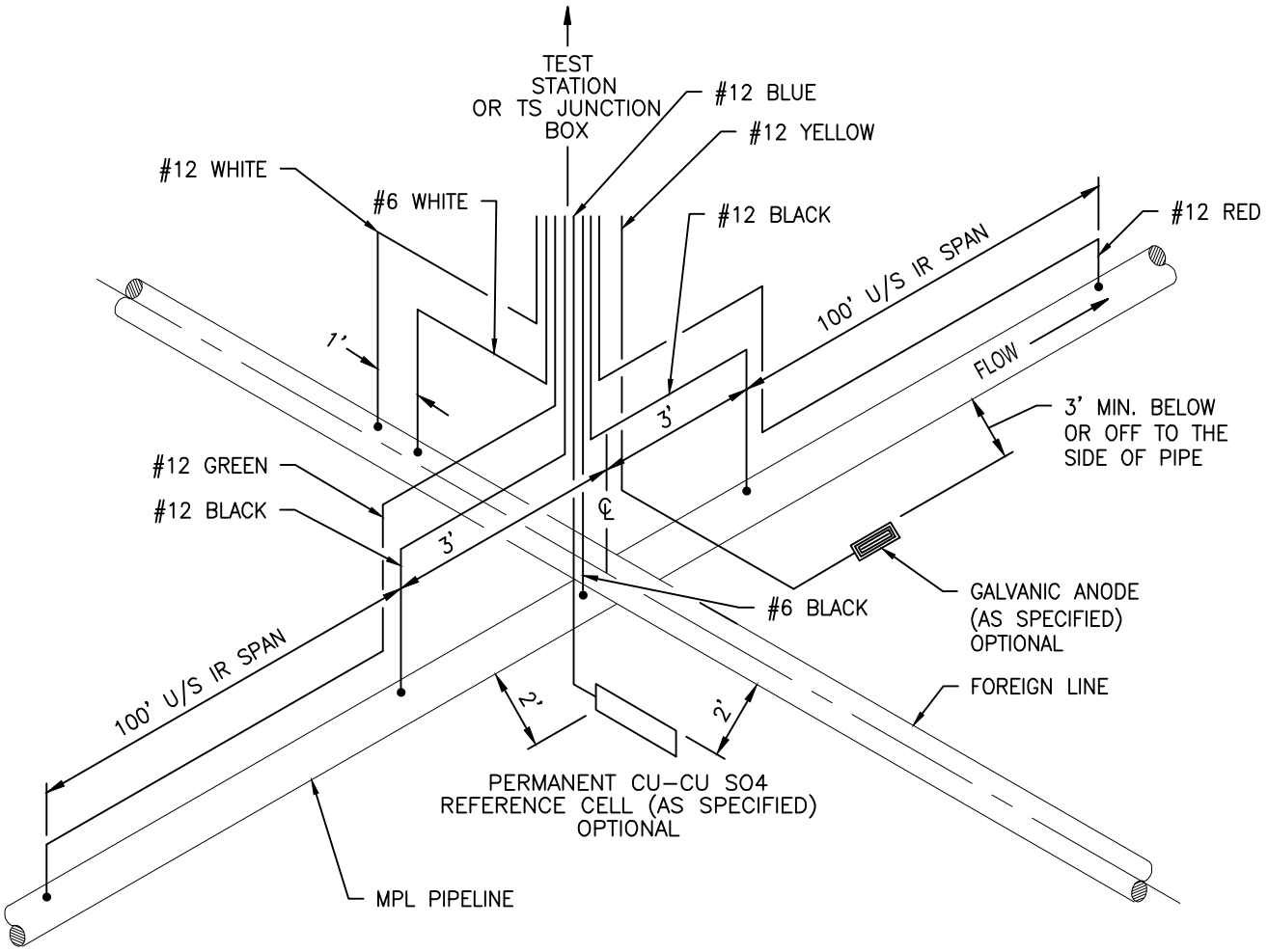

NOTES:

1. MPL PIPELINE TO HAVE A MINIMUM OF 2' CLEARANCE WITH FOREIGN PIPELINE.
2. UPSTREAM AND/OR DOWNSTREAM 100'. IR SPANS WILL TYPICALLY NOT BE INSTALLED ON AN EXISTING PIPELINE UNLESS A SUFFICIENT AMOUNT OF PIPE IS EXPOSED, OR IF THEY ARE SPECIFICALLY REQUIRED. WHEN IR SPAN IS NOT INSTALLED, THEN INSTALL TWO, INSTEAD OF ONE, #12 BLACK WIRES 12" APART.
3. ALL LEAD WIRES TO TEST STATION OR JUNCTION BOX FOR MULTIPLE FOREIGN LINE CROSSINGS.
4. TEST STATION SHALL BE INSTALLED AT COMPANY APPROVED LOCATION, WHICH MAY NOT BE NEAR CROSSING.
5. ALL LEAD WIRE CONNECTIONS TO PIPE TO BE EXOTHERMIC WELD (e.g., CADWELD) UNLESS OTHERWISE SPECIFIED.
6. ALL WIRE TO BE PROVIDED BY CONTRACTOR.

NO.	REVISION DESCRIPTION	BY	DATE	CHK'D	APP'D
		GIE	4-21-15	YA	TT

GULF INTERSTATE ENGINEERING

Marathon Pipe Line LLC

DWN. BY:	GIE	3-13-15
CHK.	GRM	3-16-15
PROJ. ENGR.	YA	–
PROJ. MGR.	TT	–
CLIENT APP.		
SCALE:	N.T.S.	

PROPOSED CORNERSTONE PIPELINE WIRING SCHEME CROSSING A FOREIGN PIPELINE AND 100 FT. IR SPANS WITH PERMANENT REFERENCE CELL

DWG. NO. 1647-100-DG-7593 | SHT. NO. 1 OF 1 | REV.

H:_doc\1647\Engineering & Technical\10_Pipeline\Mapping\DWG\Typicals\Environmental Use\1647-100-DG-7593.DWG Plotted on: Apr 21, 2015 - 11:09am by bbrooks

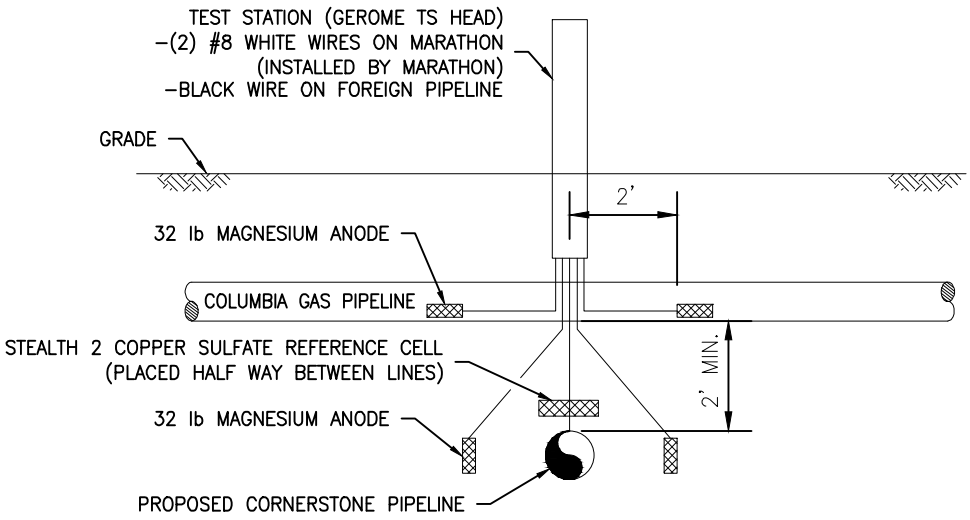

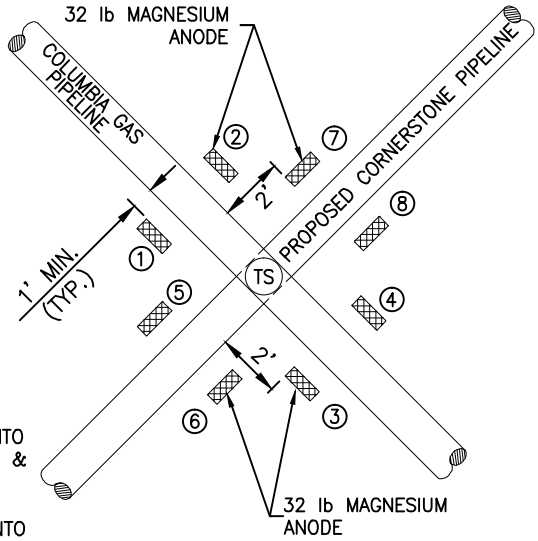

8–32 lb ANODES REQUIRED

1. ANODES 1 & 4 TIED TOGETHER, RAN UP INTO TEST STATION WITH RED WIRE TAPED GREEN & WHITE (TCO).
2. ANODES 2 & 3 TIED TOGETHER, RAN UP INTO TEST STATION WITH RED WIRE TAPED GREEN & WHITE (TCO).
3. ANODES 5 & 8 TIED TOGETHER, RAN UP INTO TEST STATION WITH RED WIRE TAPED GREEN & BLACK (MARATHON).
4. ANODES 6 & 7 TIED TOGETHER, RAN UP INTO TEST STATION WITH RED WIRE TAPED GREEN & BLACK (MARATHON).
5. TAPE COLORS SHOULD MATCH TEST LEAD COLOR OF THE OPERATORS, IF WHITE AND BLACK ARE NOT AVAILABLE.
6. #12 ANODE WIRE SHALL BE SPLICED TO #8 RED HEADER WIRE BY A BURNDY KS–17 COPPER SPLIT BOLT PATCHED WITH 3M 90–B1 SPLICE KIT.
7. ALL WIRING SHALL TERMINATE IN A GEROME SERIES 2000 TEST STATION HEAD.

CORROSION MATERIALS (SINGLE LINE CROSSING)

1. 8 PIECES–32 lb. HIGH POTENTIAL MAGNESIUM ANODES
2. 1 PIECE–STEALTH 2 COPPER SULFATE REFERENCE ELECTRODE
3. #8 COPPER STRAND WIRE, THW INSULATION. RED, BLACK AND WHITE, IF TEST STATION IS AT CROSSING AND PIPELINE IS AVERAGE DEPTH–100' OF EACH COLOR NEEDED. IF TEST STATION IS OFFSET THEN SITE VISIT WILL DETERMINE HOW MUCH WIRE.
4. 1 TEST STATION POST AND GEROME SERIES 2000 TEST STATION HEAD.
5. 4 PIECES–3M–90–B1 SPLICE KITS
6. 4 PIECES–BURNDY YS4C BUTT SPLICE LONG #4 (CRIMP)
7. 2 LINE MARKERS (FOREIGN OPERATORS LINE MARKER AND INFORMATION) TO BE PLACED AT EDGE OF TCO RIGHT OF WAY ON FOREIGN CROSSING LINE
8. ROCK SHIELD AS NEEDED

NOTE: MATERIAL WILL BE AT CROSSING SITE BEFORE EXCAVATION BEGINS OR VERIFY BY SITE VISIT TO LAYDOWN YARD THE DAY BEFORE EXCAVATION BEGINS.

NO.	REVISION DESCRIPTION	BY	DATE	CHK'D	APP'D
		GIE	4–21–15	YA	TT

GULF INTERSTATE ENGINEERING

Marathon Pipe Line LLC

DWN. BY:	GIE	4–13–15
CHK.	YA	4–13–15
PROJ. ENGR.	MR	4–13–15
PROJ. MGR.	TT	4–13–15
CLIENT APP.		
SCALE:	N.T.S.	

PROPOSED CORNERSTONE PIPELINE
TYPICAL GENERIC CROSSING PLAN
FOR TWO (2) COATED
PROTECTED PIPELINES

DWG. NO.	SHT. NO.	REV.
1647-100-DG-7594	1 OF 1	

H:_doc\1647\Engineering & Technical\10_Pipeline\Mapping\DWG\Typicals\Environmental Use\1647-100-DG-7594.DWG Plotted on: Apr 21, 2015 – 11:10am by bbrooks