Reconstructed Stream Design

A reconstructed stream channel should be dynamic in that its various parameters will be changing. For example, rock lining will displace, pools will cut, sediment will deposit, banks will erode - all of which occurs continually in natural channels. Therefore, this design is meant to function as a guideline for stream reconstruction. Actual site conditions will vary and may necessitate changes in the design. Reconstructed stream channels will be observed during the maintenance period and changes in rock size, location, vegetation, grading and other features will be incorporated as needed with the goal of creating a reasonably stable "natural channel". The criteria around which streams will be reconstructed are that the length and function of intermittent and perennial streams should approximate pre-mining conditions.

Application Map Requirements

1. No stream profiles are required to be submitted with the Application Map. Stream profiles may be requested by the Chief.
2. All pre-mining intermittent and perennial streams are to be shown on the Application Map, along with a table listing:
    a. stream identifications for each stream within the permit limits
    b. the length of each stream
    c. an indication if the stream is intermittent or perennial
3. It is presumed that the reconstructed streams will be located at the approximate pre-mining locations. If any streams are to be relocated, include a map showing the approximate location(s) of the relocated stream(s).

Annual and Final Map Requirements

1. If streams were present prior to mining, and are impacted by mining, they will be reconstructed as mining and reclamation progresses. As they are reconstructed, the location(s) of the reconstructed streams will be shown on the Annual and Final Maps, along with an indication of the reconstructed stream length.

For permits that propose to reclaim areas that have been left un-reclaimed as the result of previous pre-law surface mining, additional site specific conditions may apply. In some instances the reclamation of these pre-law mining areas could possibly replace stream restoration, instead of constructing dry channels that will not function as a stream.

The Attachment 1 Tables have been developed using Natural Channel Designs[i] for various site conditions. This table should be followed as a guideline to determine approximate dimensions for the post-mining reconstructed stream. These dimensions are approximate and the actual reconstructed stream channel may diverge from these measurements, and may vary depending on existing site conditions. ***Also included are various examples (See included Attachments) of features that may be incorporated into the reconstructed stream channel, as site conditions allow.***

The general reconstruction process is as follows:

1. The stream corridor will be formed (graded) at the time of backfilling and grading. These activities will follow the reclamation timetable stated in Part 3, D(1).

2. The corridor is defined as a swath roughly 20' to 100' in width which will function as the floodplain or flood prone area, and approximately follows the stream's pre-mining horizontal location.

3. The cross sectional grade across the floodplain should be essentially flat.

4. Once the corridor is graded and re-vegetated, it will be observed for naturally occurring erosional channels resulting from precipitation and runoff. The operator will develop the erosional channels with earthmoving activities to construct a channel that resembles a natural channel. The constructed channel will include such diverse features as variable horizontal and vertical alignments, pools, riffles, meanders, bottom width, top width, side slopes, undercut banks, substrate, and channel lining.

5. Any rip-rap used as channel lining will be of a durable non-toxic and non-acidic nature. When rip-rap is used it will be appropriately sized per the listed 100 Yr/6 Hr velocity. Whenever possible, rock from the mine site should be used in the reconstructed channel. The Flood Prone Area will normally be vegetated only. When reconstructing stream channels, care should be exerted so as to create a natural looking stream channel and not a sterile rip-rapped ditch.

6. Details of features that are compatible with or typical of those used in natural stream design are shown on the following pages.

7. Following construction activities, the corridor will then be re-soiled and re-vegetated in accordance with the respective plans and schedules in the permit application.

8. The operator will perform frequent monitoring of channel paying particular attention to its stability. The intent is for the channel to achieve a reasonable degree of stability with the understanding that some erosion and sedimentation are expected in a natural channel. Examples of unacceptable stability are channels that are experiencing headcutting, severe downcutting or erosion.

9. It may be necessary for the operator to perform repair and maintenance work before the channel can be deemed acceptable.

Calculation specifications for Attachment 1:

1. Q values were calculated using Sedcad 4.0, 1.5 Yr 6hr = 1.7”, 100Yr 6hr = 4.7”
2. 1.5 Yr velocity was calculated using Sedcad 4.0
3. 100 Yr velocity was calculated using Haestad Methods Flow Master
4. A Natural Channel Design Procedure For Reconstructed Small Headwater Streams Within Coal Mine Operations in the Western Allegheny Plateau Ecoregion of Ohio was used to determine b, dbf, dfp, meander width and length for slopes 4% or less, and the pool to pool length for slopes greater than 4%.

[i] A NATURAL CHANNEL DESIGN PROCEDURE FOR RECONSTRUCTED SMALL HEADWATER STREAMS WITHIN COAL MINE OPERATIONS IN THE WESTERN ALLEGHENY PLATEAU ECOREGION OF OHIO, Developed by the Joint Working Group of the Coal Mining Industry, Ohio Environmental Protection Agency; and Ohio Department of Natural Resources, Division of Mines and Reclamation, and Division of Soil and Water Conservation: November 1, 1999

Reconstructed Stream Design

Attachment 1 Tables

These tables have been developed using Natural Channel Designs[i] for various site conditions. This table should be followed as a guideline to determine approximate dimensions for the post-mining reconstructed stream. These dimensions are approximate and the actual reconstructed stream channel may diverge from these measurements. Also included are various examples (See included Attachments) of features that may be incorporated into the reconstructed stream channel, as site conditions allow.

Watershed (acres)	1.5 Yr/6 Hr Q (cfs)	100 Yr/6 Hr Q (cfs)	Slope <2%								
			b (ft)	d_{bf} (ft)	1.5 Yr Velocity (fps)	Channel Lining*	d_{fp} (ft)	W_{fp} (ft)	100 Yr Velocity (fps)	Meander Width (ft)	Meander Length (ft)
5	4.99	21.90	5.0	1.0	1.8	Vegetate	1.0	55	3.6	20	59
10	9.98	43.80	7.0	1.0	2.2	Vegetate	1.0	57	2.2	26	77
15	14.97	65.70	8.0	1.0	2.6	Vegetate	1.5	61	2.5	30	89
20	19.96	87.59	8.5	1.0	3.0	Vegetate	1.5	52	3.0	34	99
30	29.93	131.39	10.0	1.5	3.5	Vegetate	1.5	55	3.5	39	115
40	39.91	175.19	11.0	1.5	3.9	Vegetate	2.0	59	3.9	43	129
50	49.89	218.99	12.0	1.5	4.2	Vegetate	2.0	50	4.3	47	140
60	59.87	262.78	13.0	1.5	4.5	Vegetate	2.0	51	4.6	51	150
80	79.82	350.38	14.5	2.0	5.0	RipRap	2.5	58	4.9	56	167
90	89.80	394.18	15.0	2.0	5.1	RipRap	2.5	48	5.7	59	174
100	99.78	437.97	15.5	2.0	5.3	RipRap	2.5	49	5.8	61	181

Watershed (acres)	1.5 Yr/6 Hr Q (cfs)	100 Yr/6 Hr Q (cfs)	Slope 2% to 4%								
			b (ft)	d_{bf} (ft)	1.5 Yr Velocity (fps)	Channel Lining*	d_{fp} (ft)	W_{fp} (ft)	100 Yr Velocity (fps)	Meander Width (ft)	Meander Length (ft)
5	4.99	21.90	4.5	0.5	2.3	Vegetate	1.0	63	1.8	18	52
10	9.98	43.80	6.0	1.0	3.0	Vegetate	1.0	66	2.4	23	67
15	14.97	65.70	7.0	1.0	3.6	Vegetate	1.5	58	3.0	26	78
20	19.96	87.59	7.5	1.0	4.0	Vegetate	1.5	49	3.7	29	87
30	29.93	131.39	9.0	1.0	4.6	Vegetate	1.5	42	4.8	34	101
40	39.91	175.19	10.0	1.5	5.2	RipRap	1.5	45	5.0	38	113
50	49.89	218.99	10.5	1.5	5.6	RipRap	2.0	49	5.4	41	123
70	69.85	306.58	12.0	1.5	6.2	RipRap	2.0	50	6.0	47	139
80	79.82	350.38	13.0	1.5	6.4	RipRap	2.0	51	6.2	49	146
100	99.78	437.97	14.0	2.0	6.5	RipRap	2.5	57	6.7	54	159

Watershed (acres)	1.5 Yr/6 Hr Q (cfs)	100 Yr/6 Hr Q (cfs)	Slope 5%							
			b (ft)	d_{bf} (ft)	1.5 Yr Velocity (fps)	Channel Lining*	d_{fp} (ft)	W_{fp} (ft)	100 Yr Velocity (fps)	Pool to Pool Length (ft)
10	9.98	43.80	4.0	1.5	3.7	Vegetate	2.0	22	4.6	19
15	14.97	65.70	4.5	1.5	4.4	Vegetate	2.0	23	6.9	22
20	19.96	87.59	5.0	2.0	4.9	Vegetate	2.0	25	7.5	25
30	29.93	131.39	6.0	2.0	5.7	RipRap	2.5	29	7.6	29
40	39.91	175.19	6.5	2.0	6.2	RipRap	3.0	33	8.2	32
60	59.87	262.78	8.0	2.5	6.6	RipRap	3.5	39	9.1	37
90	89.80	394.18	9.0	3.0	6.8	RipRap	4.0	45	10.0	43
100	99.78	437.97	9.5	3.0	7.0	RipRap	4.0	46	10.3	45

Watershed (acres)	1.5 Yr/6 Hr Q (cfs)	100 Yr/6 Hr Q (cfs)	Slope 6% to 10%							
			b (ft)	d_{bf} (ft)	1.5 Yr Velocity (fps)	Channel Lining*	d_{fp} (ft)	W_{fp} (ft)	100 Yr Velocity (fps)	Pool to Pool Length (ft)
5	4.99	21.90	3.0	1.0	3.7	Vegetate	1.5	26	6.8	14
10	9.98	43.80	4.0	1.5	4.9	Vegetate	1.5	19	8.1	18
20	19.96	87.59	5.0	1.5	6.3	RipRap	2.0	23	8.9	24
30	29.93	131.39	6.0	2.0	6.6	RipRap	2.5	29	9.8	28
50	49.89	218.99	7.0	2.5	7.0	RipRap	3.0	35	11.1	34
70	69.85	306.58	8.0	2.5	7.7	RipRap	3.5	39	12.1	38
100	99.78	437.97	9.0	3.0	8.6	RipRap	4.0	45	13.3	44

Watershed (acres)	1.5 Yr/6 Hr Q (cfs)	100 Yr/6 Hr Q (cfs)	Slope 15%							
			b (ft)	d_{bf} (ft)	1.5 Yr Velocity (fps)	Channel Lining*	d_{fp} (ft)	W_{fp} (ft)	100 Yr Velocity (fps)	Pool to Pool Length (ft)
30	29.93	131.39	1.0	2.5	8.5	RipRap	2.0	23	11.9	17
50	49.89	218.99	2.0	2.5	9.0	RipRap	2.5	27	13.5	20
70	69.85	306.58	3.0	3.0	9.4	RipRap	3.0	33	14.7	23
100	99.78	437.97	4.0	3.0	10.3	RipRap	3.5	37	16.2	26

Watershed (acres)	1.5 Yr/6 Hr Q (cfs)	100 Yr/6 Hr Q (cfs)	Slope 20% to 25%							
			b (ft)	d_{bf} (ft)	1.5 Yr Velocity (fps)	Channel Lining*	d_{fp} (ft)	W_{fp} (ft)	100 Yr Velocity (fps)	Pool to Pool Length (ft)
30	29.93	131.39	1.0	2.5	9.1	RipRap	2.0	23	14.4	16
50	49.89	218.99	2.0	2.5	10.2	RipRap	2.5	27	16.4	19
80	79.82	350.38	3.0	3.0	11.6	RipRap	3.0	33	18.4	23
100	99.78	437.97	3.5	3.0	11.6	RipRap	3.0	34	19.4	25

Watershed (acres)	1.5 Yr/6 Hr Q (cfs)	100 Yr/6 Hr Q (cfs)	Slope 30% to 35%							
			b (ft)	d_{bf} (ft)	1.5 Yr Velocity (fps)	Channel Lining*	d_{fp} (ft)	W_{fp} (ft)	100 Yr Velocity (fps)	Pool to Pool Length (ft)
40	39.91	175.19	1.0	2.5	11.1	RipRap	2.0	23	17.6	16
70	69.85	306.58	2.0	2.5	11.6	RipRap	2.5	27	20.2	20
100	99.78	437.97	3.0	3.0	12.7	RipRap	3.0	33	22.1	23

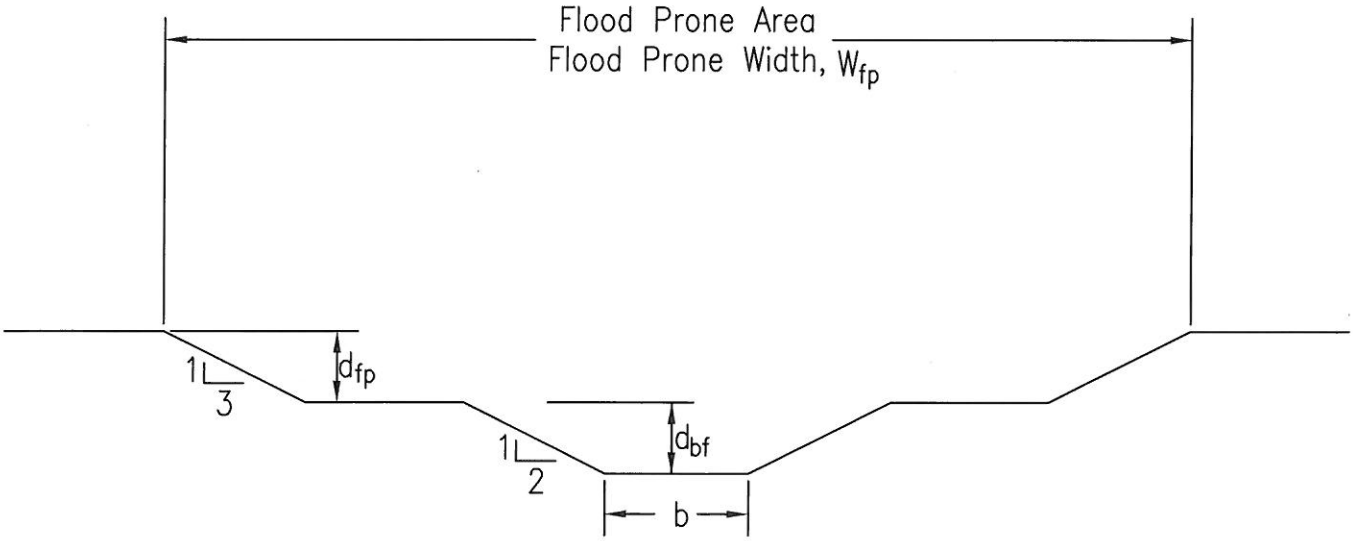

TWO-STAGE CHANNEL

Low Flow Channel:
The capacity of the Low Flow Channel shall handle the 1.5 year 6 hour storm.

The flow length of the low flow channel should equal the original channel length.

Minimize use of riprap armored channels. If used, the riprap above the normal low flow should be covered with soil and planted.

Flood Prone Area:
The capacity of the Flood Prone Area plus the Low Flow Channel shall handle the 100 year 6 hour storm.

Encourage natural vegetation in the Flood Prone Area for the benefits of water quality, bank stability and wildlife.

Flood Prone Areas shall have side slopes approximating 3:1, however variable slopes are prefered.

Definitions:

b - Bottom width of the channel to handle the 1.5 Yr. storm event
d_{bf} - Bank full depth of the channel to handle the 1.5 Yr. storm event
d_{fp} - Depth of the flood prone area
W_{fp} - Width of the flood prone area

TYPICAL CHANNEL PROFILE FOR SLOPES GREATER THAN 4%

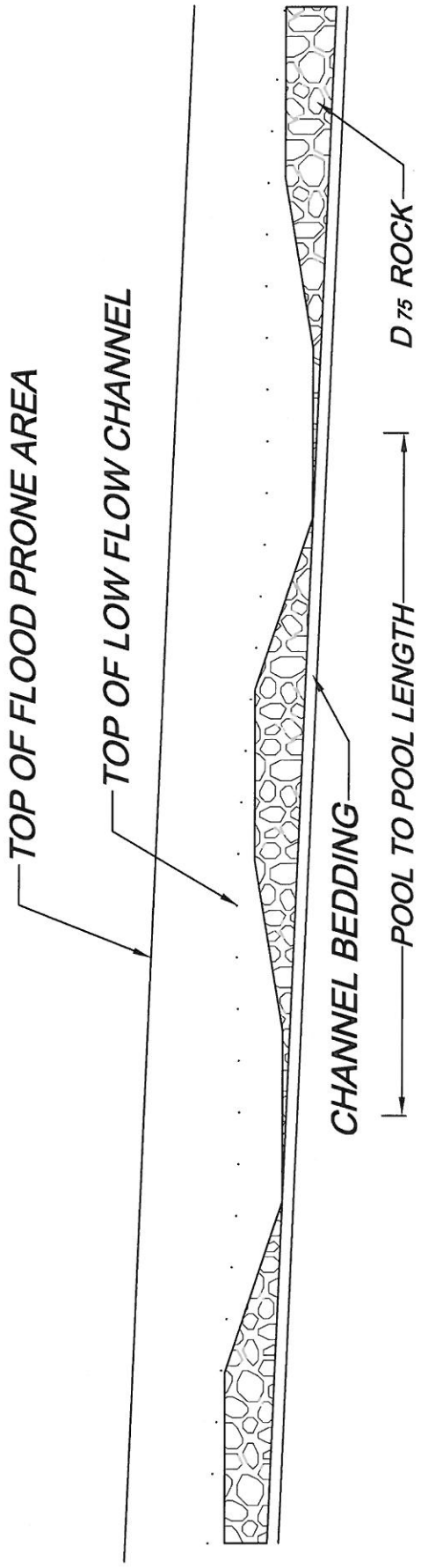

DRAWING NOT TO SCALE

TYPICAL MEANDER PATTERN FOR SLOPE RANGE 2-4%

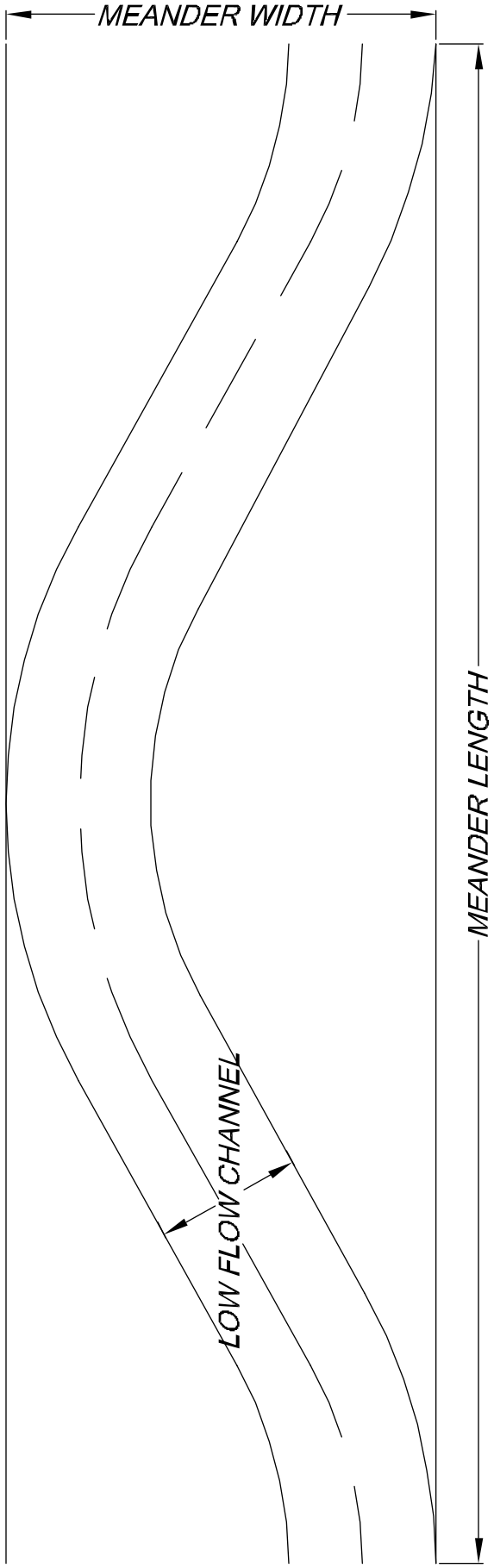

DRAWING NOT TO SCALE

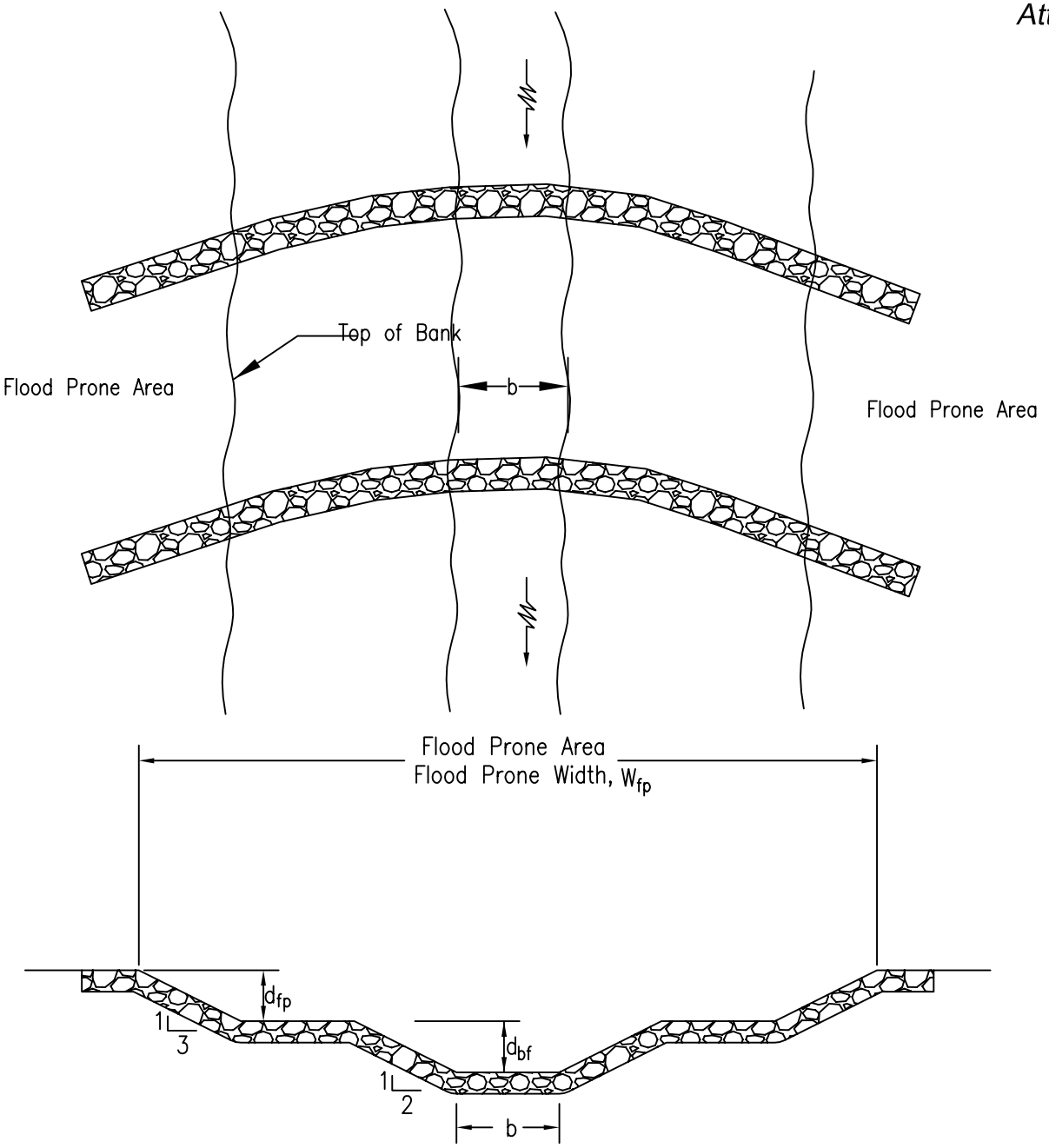

ROCK CHECK

Appropriately sized durable rock shall be used.

The ends shall extend from the top of the channel into the banks 10 ft. or a distance equal to about one-half the channel width, whichever is less.

The trench shall be 1 to 2 ft. wide and shall be dug to arc or form a vee pointing upstream with the midsection of the rock check farther upstream than where it meets the channel bank.

The rock check shall be flush with the channel so that the finished rock surface is on the same grade as the channel bottom and not creating a dam or ponding water.

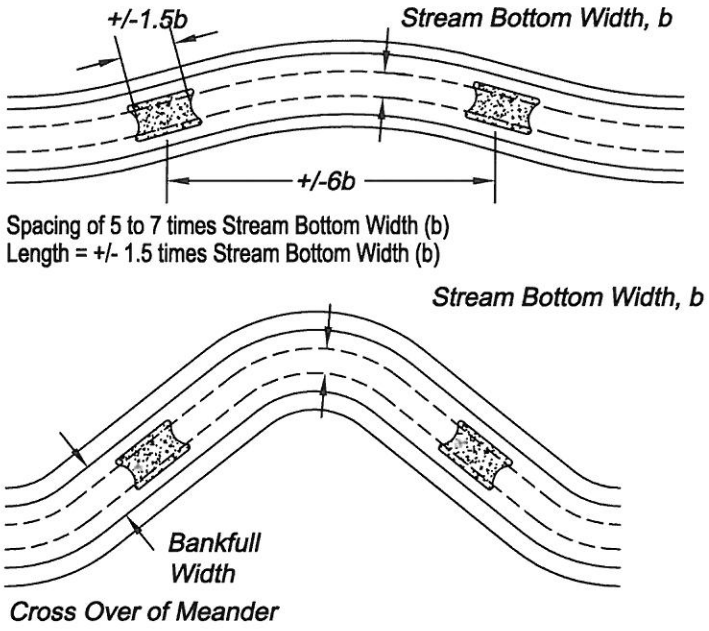

GRAVEL RIFFLE PLACEMENT AND SPACING

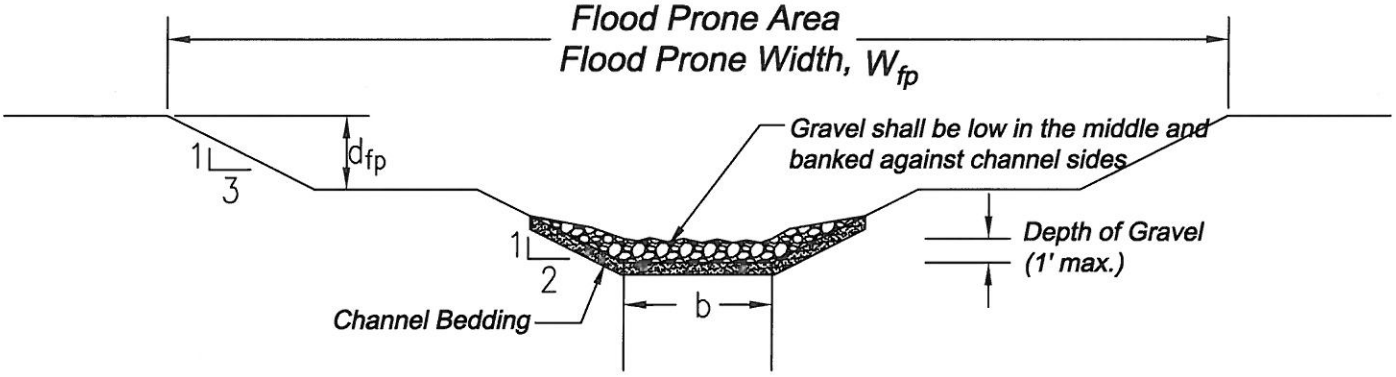

GRAVEL RIFFLE

The length of gravel riffle shall be equivalent to 1.5 times the stream bottom width, b.

The gravel shall NOT be placed so that it acts as a dam or creates a backwater pool. It shall be generally less than 1 ft. thick and no higher than the Max. Riffle Depth.

The gravel shall be placed so that it is slightly lower in the middle and higher by the streambanks.

Gravel size shall be similar to the substrate from the former stream channel. The gravel will be stable at bankfull flow but erodible at Q100 flow.

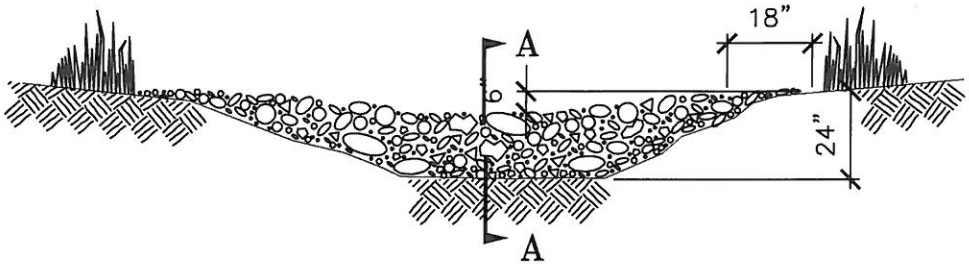

VIEW LOOKING UPSTREAM

NOTE:
KEY STONE INTO THE DITCH BANKS
AND EXTEND IT BEYOND THE ABUTMENTS
A MINIMUM OF 18" TO PREVENT OVER
FLOW AROUND DAM.

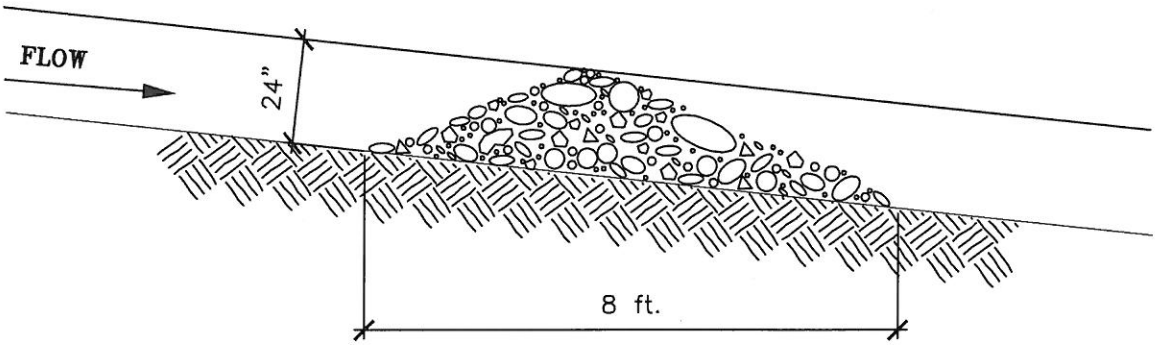

SECTION A – A

'L' = THE DISTANCE SUCH THAT POINTS 'A' AND
'B' ARE OF EQUAL ELEVATION.

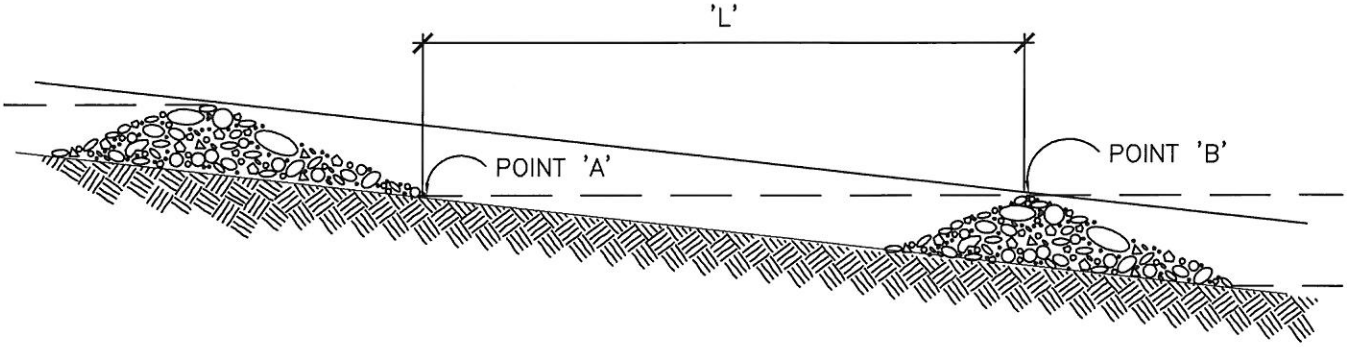

SPACING BETWEEN CHECK DAMS

ROCK CHECK DAM

Rev: 2-7-2013

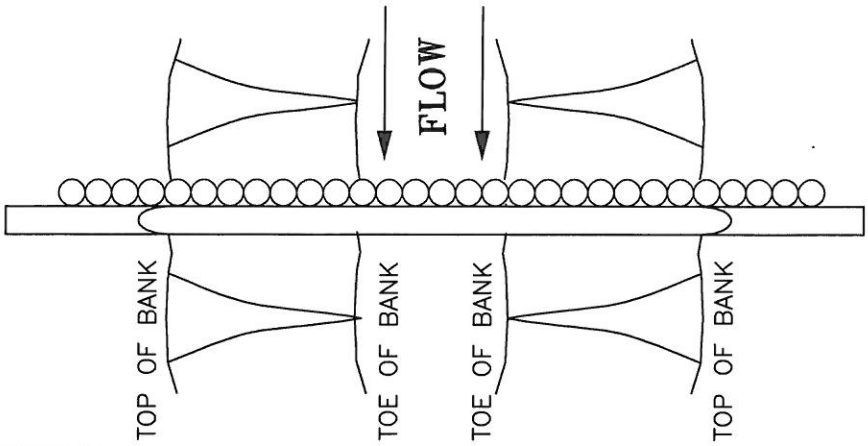

PLAN VIEW

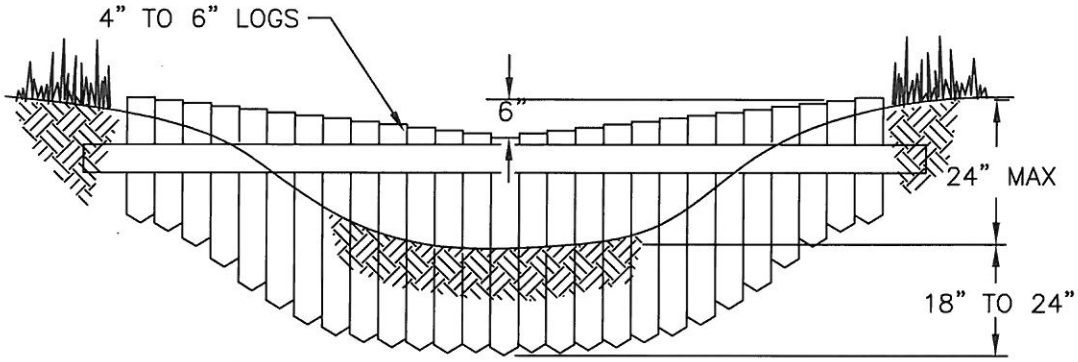

VIEW LOOKING UPSTREAM

'L' = THE DISTANCE SUCH THAT POINTS 'A' AND 'B' ARE OF EQUAL ELEVATION

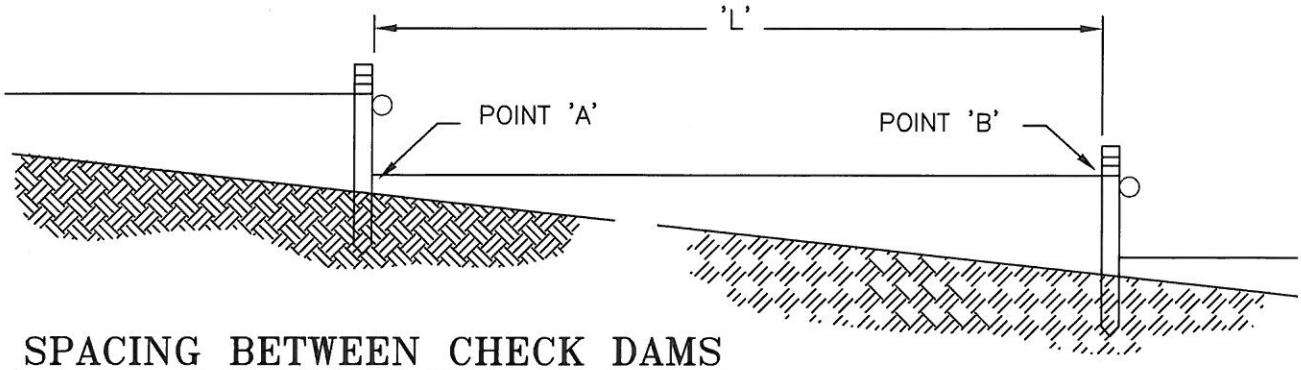

SPACING BETWEEN CHECK DAMS

NOTE:
KEY THE ENDS OF THE CHECK DAM INTO THE CHANNEL BANK. LOGS SHALL BE PRESSURE TREATED IF GRADE STABILIZATION STRUCTURE IS INTENDED TO BE PERMANENT.

LOG CHECK DAM

Rev: 2-7-2013

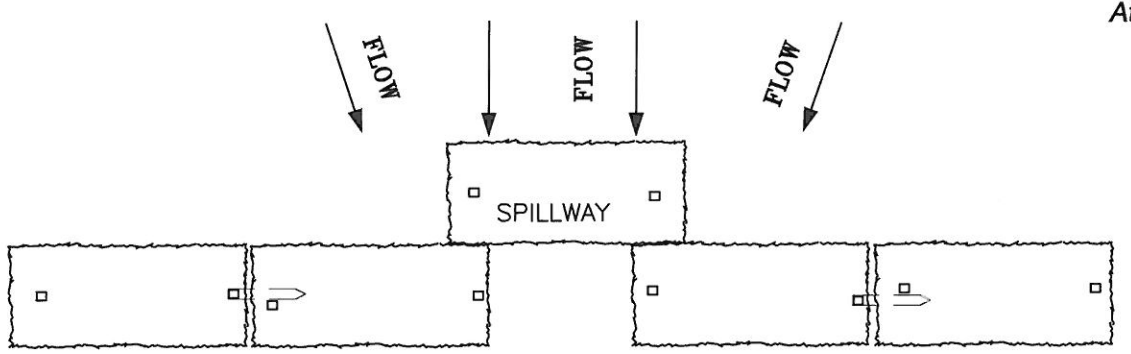

PLAN

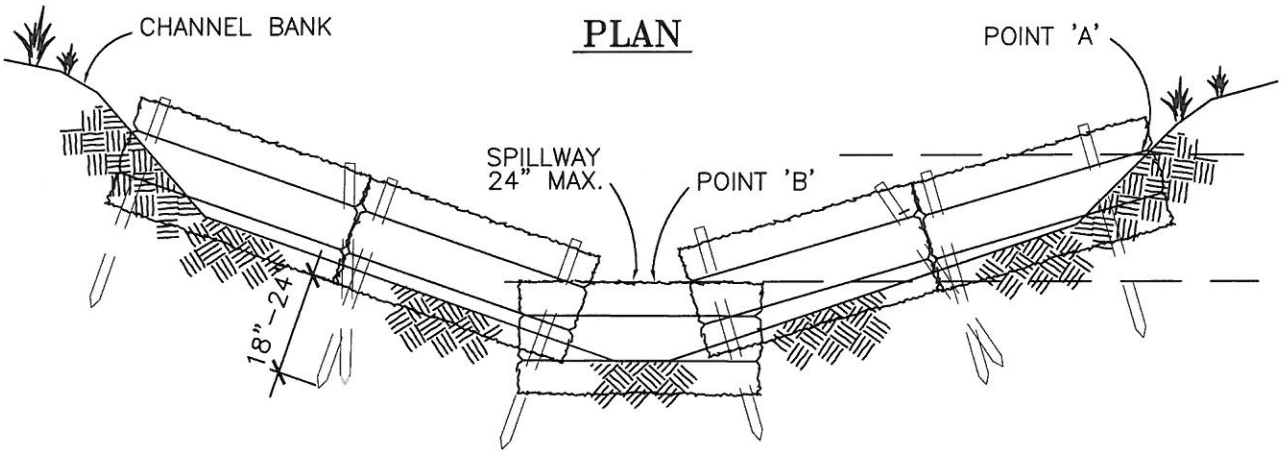

VIEW LOOKING UPSTREAM

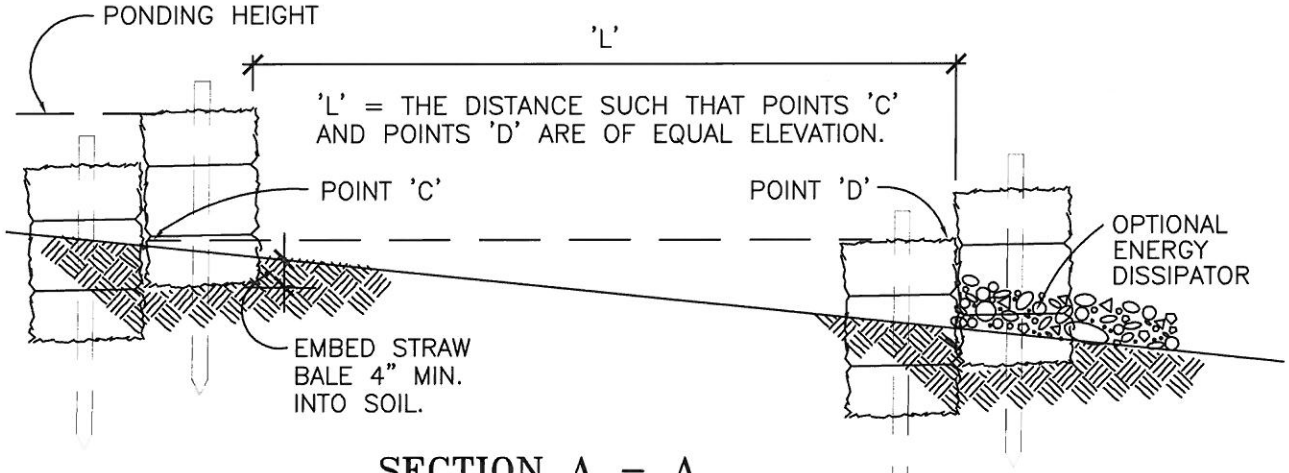

SECTION A – A
SPACING BETWEEN CHECK DAMS

NOTES:

1. EMBED BALES 4" INTO THE SOIL AND 'KEY' BALES INTO THE CHANNEL BANKS.
2. POINT 'A' MUST BE HIGHER THAN POINT 'B'. (SPILLWAY HEIGHT)
3. PLACE BALES PERPENDICULAR TO THE FLOW WITH ENDS TIGHTLY ABUTTING. USE STRAW, ROCKS OR FILTER FABRIC TO FILL ANY GAPS AND TAMP BACKFILL MATERIAL TO PREVENT EROSION OR FLOW AROUND THE BALES.
4. SPILLWAY HEIGHT SHALL NOT EXCEED 24".
5. INSPECT AFTER EACH SIGNIFICANT STORM, MAINTAIN AND REPAIR PROMPTLY.

STRAW BALE CHECK DAM

Rev: 2-7-2013

WILLOW CUTTING AND PLANTING SHOULD BE PERFORMED WHEN PLANT MATERIAL IS DORMANT. (NOVEMBER – APRIL)

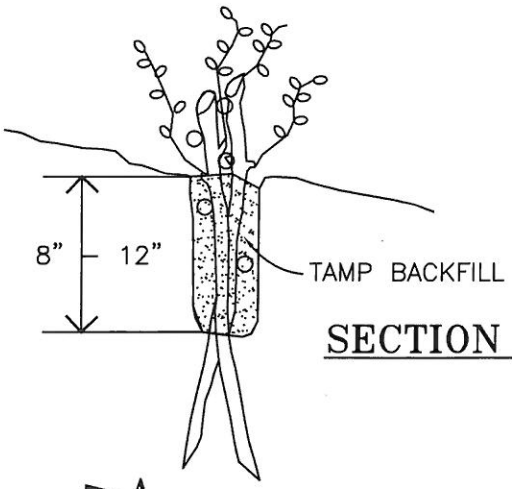

SECTION A – A

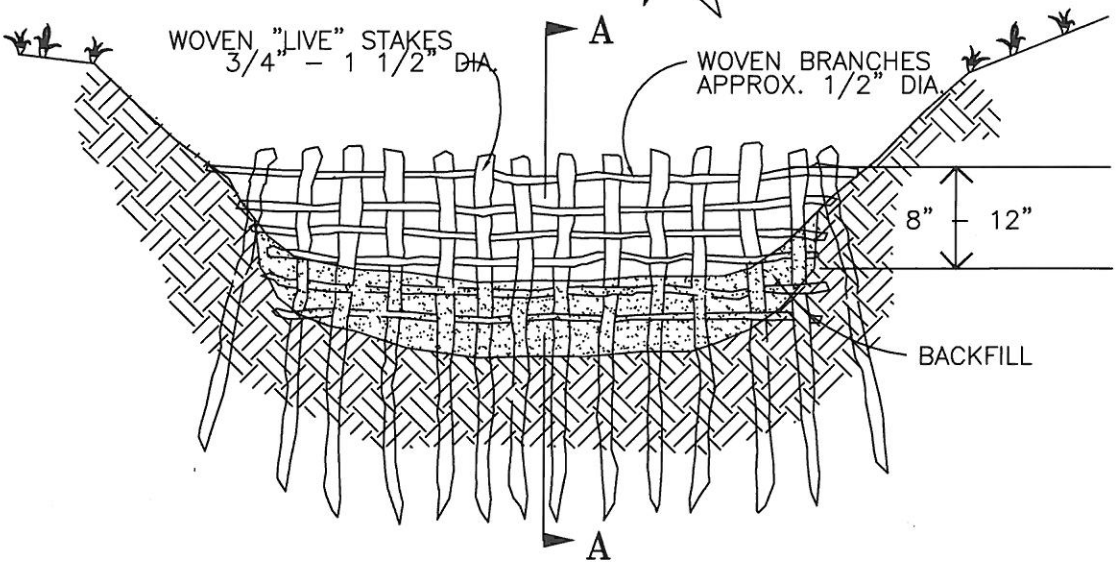

SECTION B – B

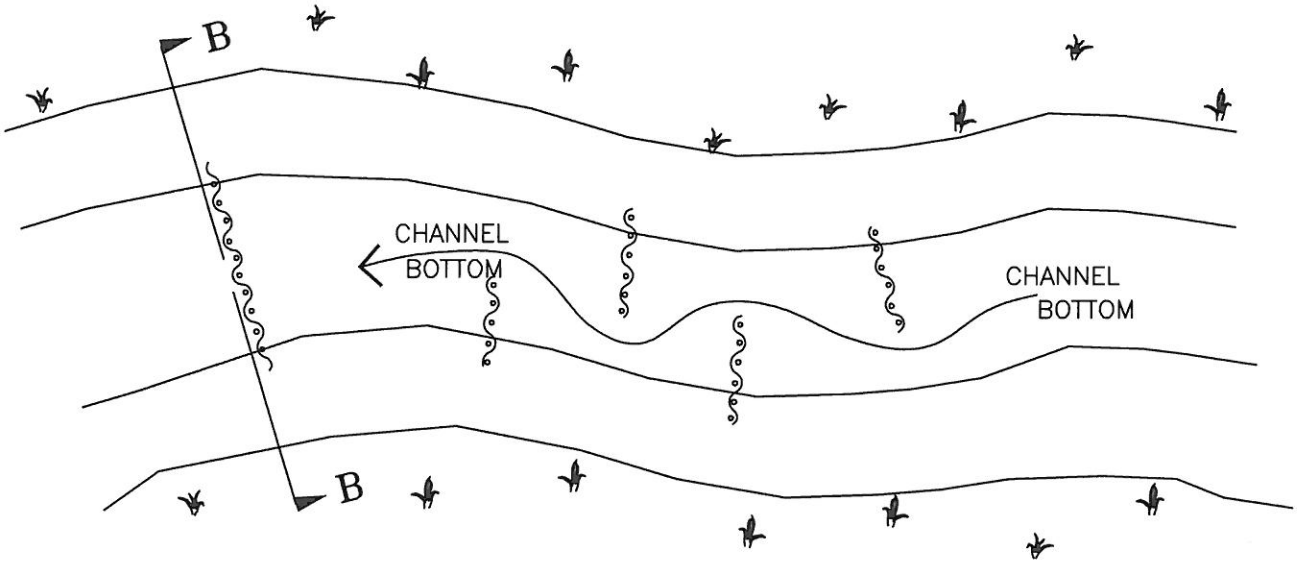

WOVEN WILLOW (LIVE) CHECKDAMS ACT AS VELOCITY DISSIPATORS TO REDUCE GULLY DOWNCUTTING

WOVEN WILLOW CHECK DAM

Rev: 2-7-2013

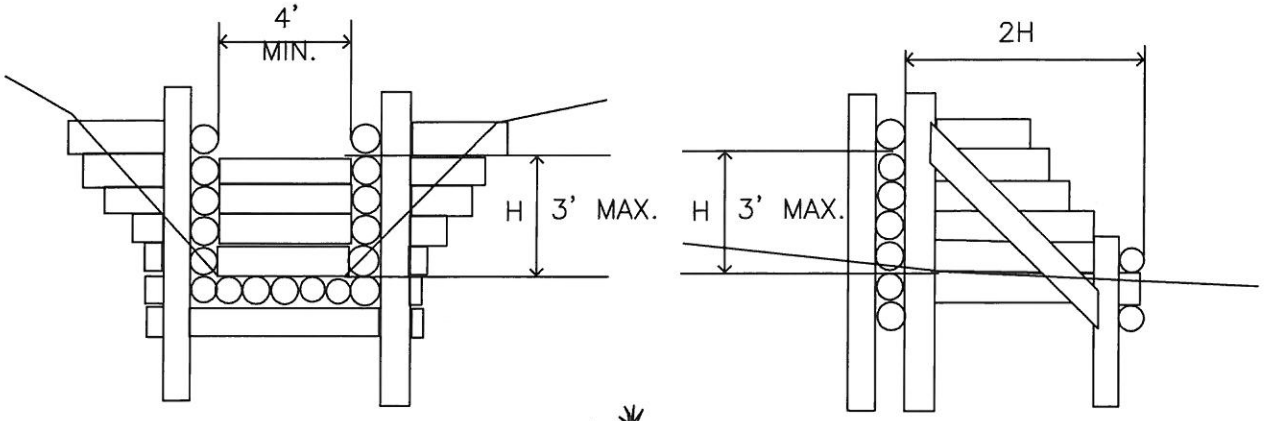

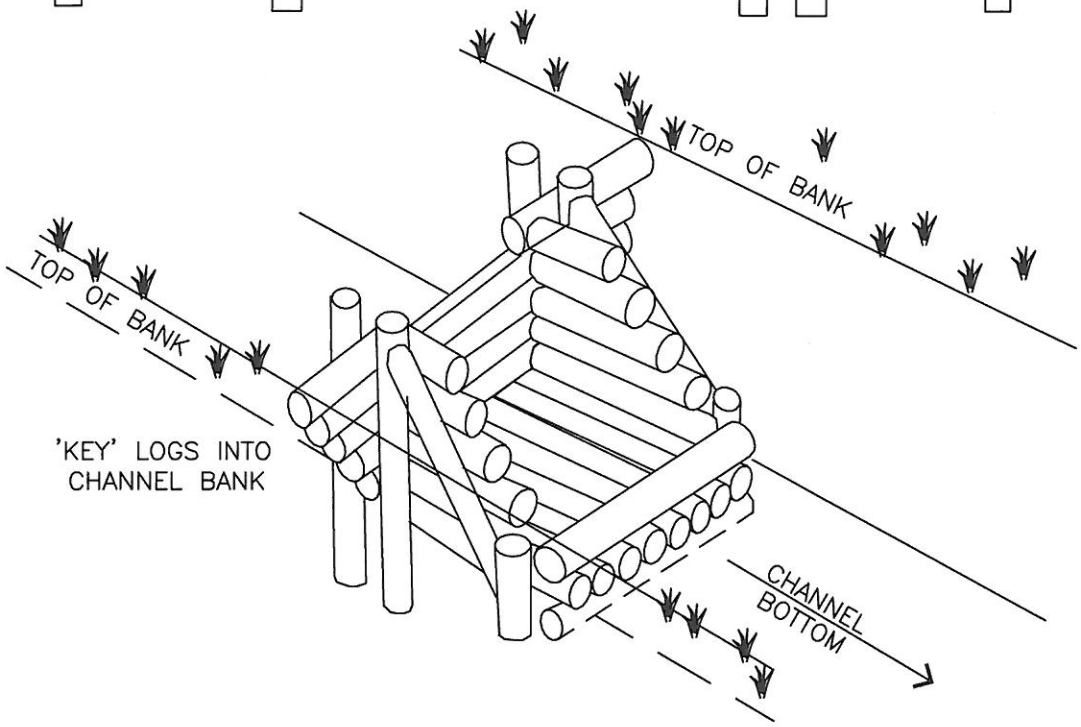

'L' = THE DISTANCE SUCH THAT POINTS 'A' AND 'B'
ARE OF EQUAL ELEVATION

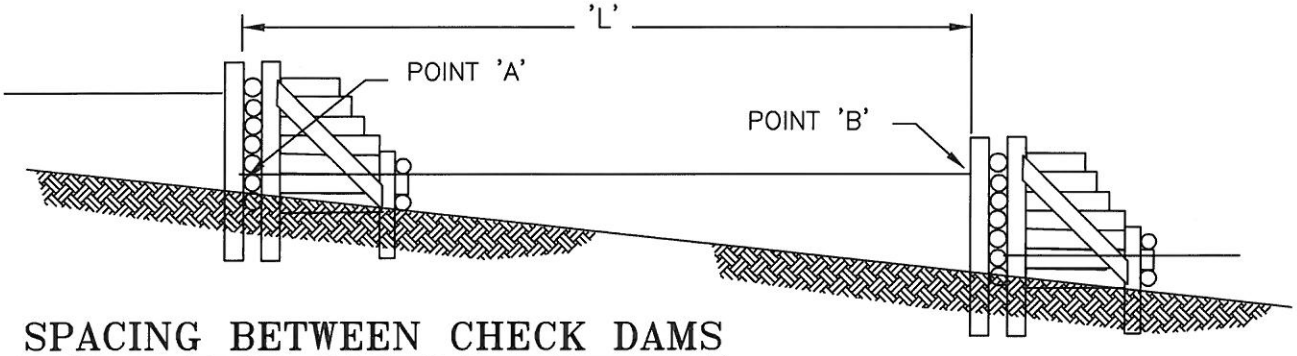

SPACING BETWEEN CHECK DAMS

LOG GRADE STABILIZATION STRUCTURE

Rev: 2-7-2013

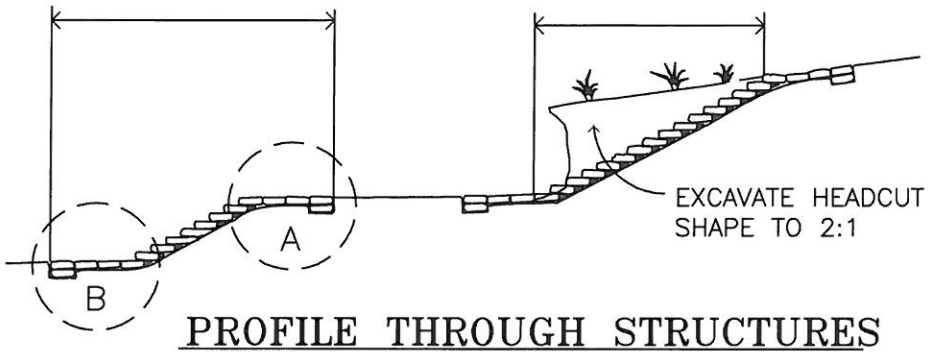

PROFILE THROUGH STRUCTURES

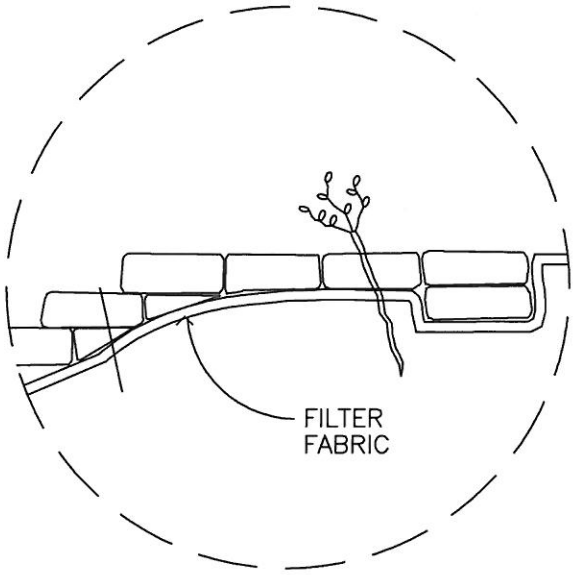

DETAIL – 'A'

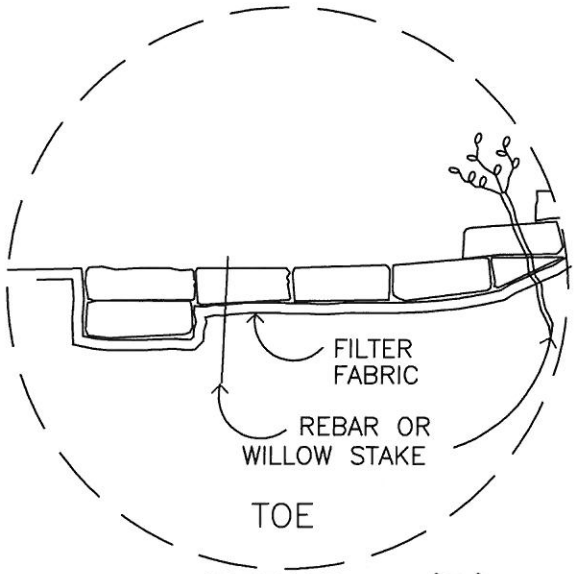

DETAIL – 'B'

BURLAP SACKS FILLED WITH
4 PARTS SAND – 1 PART CEMENT
OR GEOTEXTILE SANDBAGS
FILLED WITH SAND/SOIL.

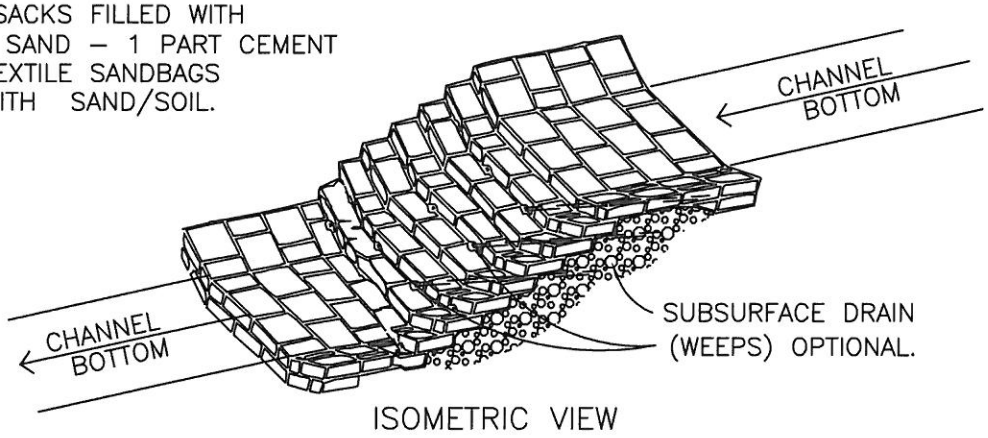

SANDBAG HEADCUT STRUCTURE

NOTES:

1. GEOTEXTILE SANDBAGS MAY BE STAKED WITH LIVE WILLOW STAKES, REBAR OR 'SNAP TIE' STAKES SHOULD BE USED WITH CEMENT SANDBAGS.
2. ROCK RIPRAP MAY BE USED IN PLACE OF SANDBAGS.

SANDBAG HEADCUT STRUCTURE

Rev: 2-7-2013