National Pollutant Discharge Elimination System (NPDES) Permit Program

F A C T S H E E T

Regarding an NPDES Permit To Discharge to Waters of the State of Ohio
for **PCS Nitrogen Ohio, L.P.**

Public Notice No.: 11-01-052
Public Notice Date: January 31, 2011
Comment Period Ends: February 2, 2011

OEPA Permit No.: **2IF00004*JD**
Application No.: (OH #) **OH0002415**

Name and Address of Applicant:

PCS Nitrogen Ohio, L.P.
1900 Fort Amanda Road
Lima, Ohio 45804

Name and Address of Facility Where Discharge Occurs:

PCS Nitrogen Ohio, L.P.
1900 Fort Amanda Road
Lima, Ohio 45804
Allen County

Receiving Water: **Ottawa River**

Subsequent Stream Network: **Auglaize River to Maumee River to Lake Erie**

Introduction

Development of a Fact Sheet for NPDES permits is required by Title 40 of the Code of Federal Regulations, Section 124.8 and 124.56. This document fulfills the requirements established in those regulations by providing the information necessary to inform the public of actions proposed by the Ohio Environmental Protection Agency, as well as the methods by which the public can participate in the process of finalizing those actions.

This Fact Sheet is prepared in order to document the technical basis and risk management decisions that are considered in the determination of water quality based NPDES Permit effluent limitations. The technical basis for the Fact Sheet may consist of evaluations of promulgated effluent guidelines and other treatment-technology based standards, existing effluent quality, instream biological, chemical and physical conditions, and the allocations of pollutants to meet Ohio Water Quality Standards. This Fact Sheet details the discretionary decision-making process empowered to the director by the Clean Water Act and Ohio Water Pollution Control Law (ORC 6111). Decisions to award variances to Water Quality Standards or promulgated effluent guidelines for economic or technological reasons will also be justified in the Fact Sheet where necessary.

Effluent limits based on available treatment technologies are required by Section 301(b) of the Clean Water Act. Many of these have already been established by U.S. EPA in the effluent guideline regulations (a.k.a. categorical regulations) for industry categories in 40 CFR Parts 405-499. Technology-based regulations for publicly-owned treatment works are listed in the Secondary Treatment Regulations

(40 CFR Part 133). If regulations have not been established for a category of dischargers, the director may establish technology-based limits based on best professional judgment (BPJ).

Ohio EPA reviews the need for water-quality-based limits on a pollutant-by-pollutant basis. Wasteload allocations are used to develop these limits based on the pollutants that have been detected in the discharge, and the receiving water's assimilative capacity. The assimilative capacity depends on the flow in the water receiving the discharge, and the concentration of the pollutant upstream. The greater the upstream flow, and the lower the upstream concentration, the greater the assimilative capacity is. Assimilative capacity may represent dilution (as in allocations for metals), or it may also incorporate the break-down of pollutants in the receiving water (as in allocations for oxygen-demanding materials).

The need for water-quality-based limits is determined by comparing the wasteload allocation for a pollutant to a measure of the effluent quality. The measure of effluent quality is called PEQ - Projected Effluent Quality. This is a statistical measure of the average and maximum effluent values for a pollutant. As with any statistical method, the more data that exists for a given pollutant, the more likely that PEQ will match the actual observed data. If there is a small data set for a given pollutant, the highest measured value is multiplied by a statistical factor to obtain a PEQ; for example if only one sample exists, the factor is 6.2, for two samples - 3.8, for three samples - 3.0. The factors continue to decline as samples sizes increase. These factors are intended to account for effluent variability, but if the pollutant concentrations are fairly constant, these factors may make PEQ appear larger than it would be shown to be if more sample results existed.

Summary of Proposed Permit Conditions

With few exceptions, monitoring requirements and limits for outfalls 001, 002, 003, 004 and 603 have been continued from the existing permit. A limit for mercury has been added at outfall 001 and the limit is based upon approval of a mercury variance. Monitoring for temperature and selenium has been added for outfall 001, and barium and strontium have been removed from the permit.

The permit also requires signs to be posted at each outfall, and a new study to be conducted if dissolved metal translators are to be used in development of the next waste load allocation. In addition, the factsheet explains that a new water quality study must be undertaken and submitted if alternative effluent limits for ammonia are to be ccontinued in the subsequent permit.

This permit renewal is proposed for a term of approximately of approximately **four years**, expiring on **January 31, 2015**. This schedule will allow the PCS Nitrogen permit to be on a similar schedule with the other facilities within the same watershed basin.

Table of Contents

Page

Introduction 1

Table of Contents 2

Procedures for Participation in the Formulation of Final Determinations 5

Location of Discharge/Receiving Water Use Classification 6

Facility Description 7

Description of Existing Discharge 7

Permit Violations 10

Water Quality of Receiving Waters / Record of Spills 10

Development of Water Quality-Based Effluent Limits 11
- Parameter Selection 11
- Wasteload Allocation 12
- Reasonable Potential 12
- Dissolved Metal Translators 13
- Whole Effluent Toxicity WLA 13

Effluent Limits / Hazard Management Decisions 14

Other Requirements 19

Whole Effluent Toxicity Reasonable Potential 19

List of Figures

Figure 1. Location of PCS Nitrogen 6

Figure 2. Wastewater Flow Schematic 9

Figure 3. Ottawa River Study Area 12

Table of Contents (continued)

List of Tables

Table 1. Description of PCS Nitrogen Outfalls 8

Table 2. Flow Rates for Outfalls 001 and 603 8

Table 3. Division of Surface Water Watershed Assessment Unit Summary 10

Table 4. Spills Reported at PCS Nitrogen: 2005 – 2010..... 11

Table 5. Default Allocation for Total Dissolved Solids..... 16

Table 6. Re-Allocation of Total Dissolved Solids Load: 2010 17

Table 7. Acute Toxicity Test Results 19

Table 8. Effluent Concentrations Based Upon NPDES Application and Ohio EPA Bioassays..... 21

Table 9. Effluent Characterization and Decision Criteria: January 2005 – August 2010 22

Table10. Effluent Data for PCS Nitrogen 26

Table 11. Water Quality Criteria in the Study Area..... 27

Table 12. Instream Conditions and Discharger Flow 28

Table 13. Summary of Effluent Limits to Maintain Applicable Water Quality Criteria 30

Table 14. Parameter Assessment..... 31

Table 15-xxx. Final Effluent Limits and Monitoring Requirements

Table 15-001. Final Effluent Limits and Monitoring Requirements for Outfall 001 32

Table 15-002. Final Effluent Limits and Monitoring Requirements for Outfalls 001, 002, 003, and 004 Parameter Assessment..... 33

Table 15-603. Final Effluent Limits and Monitoring Requirements for Outfall 603 33

Attachment A. Federal Effluent Guidelines Applicable to PCS Nitrogen 35

Procedures for Participation in the Formulation of Final Determinations

The draft action shall be issued as a final action unless the Director revises the draft after consideration of the record of a public meeting or written comments, or upon disapproval by the Administrator of the U.S. Environmental Protection Agency.

Within thirty days of the date of the Public Notice, any person may request or petition for a public meeting for presentation of evidence, statements or opinions. The purpose of the public meeting is to obtain additional evidence. Statements concerning the issues raised by the party requesting the meeting are invited. Evidence may be presented by the applicant, the state, and other parties, and following presentation of such evidence other interested persons may present testimony of facts or statements of opinion.

Requests for public meetings shall be in writing and shall state the action of the Director objected to, the questions to be considered, and the reasons the action is contested. Such requests should be addressed to:

Legal Records Section
Ohio Environmental Protection Agency
Lazarus Government Center
P.O. Box 1049
Columbus, Ohio 43216-1049

Interested persons are invited to submit written comments upon the discharge permit. Comments should be submitted in person or by mail no later than 30 days after the date of this Public Notice. Deliver or mail all comments to:

Ohio Environmental Protection Agency
Attention: Division of Surface Water
Water Resource Management Section
Lazarus Government Center
P.O. Box 1049
Columbus, Ohio 43216-1049

The OEPA permit number and Public Notice numbers should appear on each page of any submitted comments. All comments received no later than 30 days after the date of the Public Notice will be considered.

The application, fact sheet, public notice, permit including effluent limitations, special conditions, comments received and other documents are available for inspection and may be copied at a cost of 25 cents per page at the Ohio Environmental Protection Agency at the address shown above any time between the hours of 8:00 a.m. and 5:00 p.m., Monday through Friday. Copies of the Public Notice are available at no charge at the same address.

For additional information about this fact sheet or the draft permit, contact Tom Poffenbarger in Ohio EPA's northwest District Office [telephone: (419-373-3008); or email: tom.poffenbarger@epa.state.oh.us], or Mike McCullough in Ohio EPA's Central Office [telephone: (614-644-4824); or email: mike.mccullough@epa.state.oh.us].

Location of Discharge/Receiving Water Use Classification

PCS Nitrogen Ohio, L.P. is located in Lima, Ohio, and discharges to the Ottawa River at river mile (RM) 36.9. The approximate location of the facility's discharge is shown in Figure 1. This segment of the Ottawa River is described by: Ohio EPA River Code 04-200; USEPA River Reach #04100007-018; County – Lucas; Ecoregion: Eastern Corn Belt Plains (ECBP). The Ottawa River is presently designated for the following uses: warmwater habitat, agricultural water supply, industrial water supply, and Class A primary contact recreation.

Use designations define the goals and expectations for a waterbody. These goals are set for aquatic life protection, recreation use and water supply use, and are defined in the Ohio Water Quality Standards, or the Ohio Administrative Code (OAC 3745-1-07). The use designations for individual waterbodies are listed in rules -08 through -32 of the OAC. Once the goals are set, numeric water quality standards are developed to protect these uses; higher quality uses typically have more protective water quality criteria.

Use designations for aquatic life protection include habitats for coldwater fish and macroinvertebrates, warmwater aquatic life and waters with exceptional communities of warmwater organisms. These uses all meet the goals of the federal Clean Water Act. Ohio Water Quality Standards (WQS) also include aquatic life use designations for waterbodies which can not meet the Clean Water Act goals because of human-caused conditions that can not be remedied without causing fundamental changes to land use and widespread economic impact. The dredging and clearing of some small streams to support agricultural

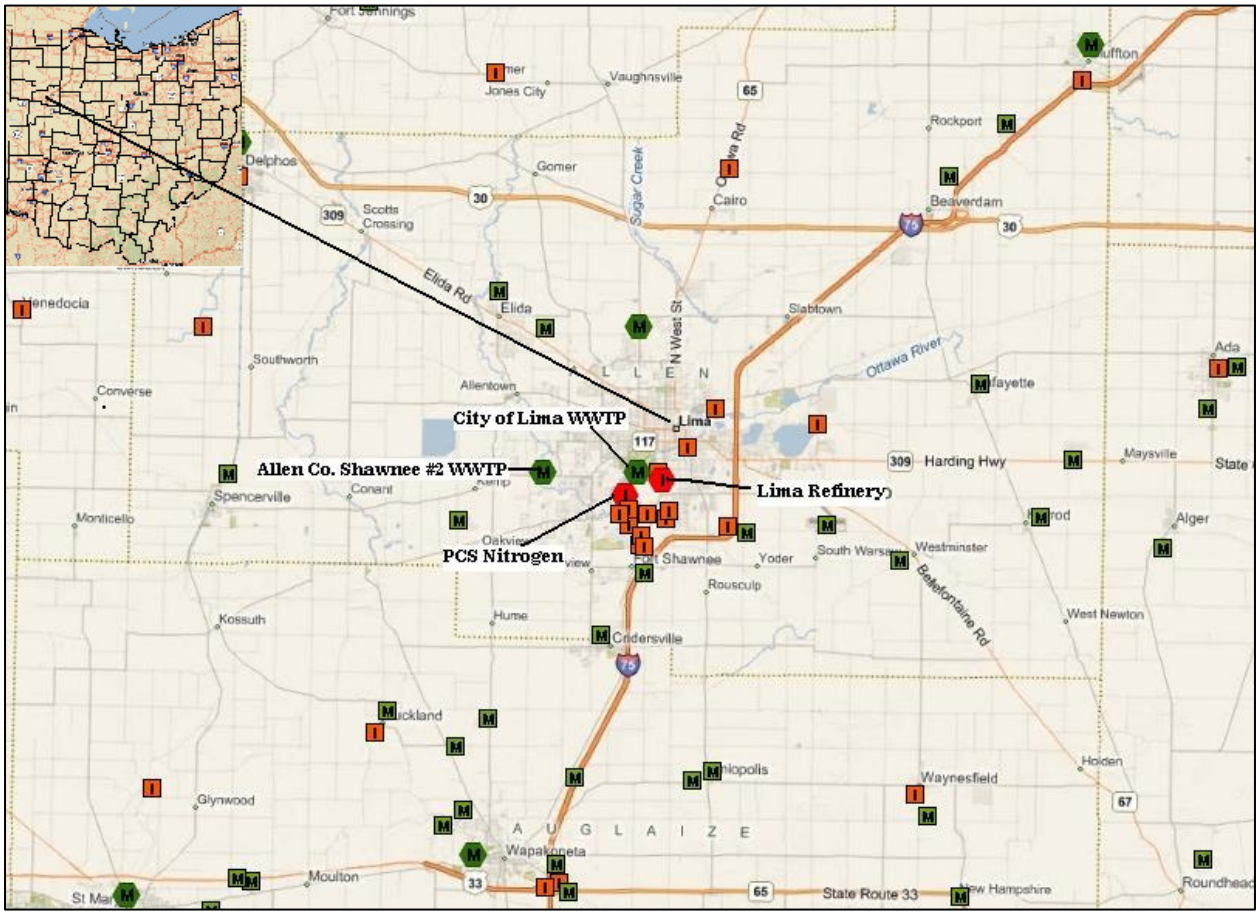

Figure 1. Location of PCS Nitrogen

or urban drainage is the most common of these conditions. These streams are given Modified Warmwater or Limited Resource Water designations.

Recreation uses are defined by the depth of the waterbody and the potential for wading or swimming. Uses are defined for bathing waters, swimming/canoeing (Primary Contact) and wading only (Secondary Contact - generally waters too shallow for swimming or canoeing). Water supply uses are defined by the actual or potential use of the waterbody. Public Water Supply designations apply near existing water intakes so that waters are safe to drink with standard treatment. Most other waters are designated for agricultural and industrial water supply.

Facility Description

PCS Nitrogen manufactures ammonia and several other products that use ammonia as a raw material. Ammonia, urea, nitric acid, ammonium nitrate, and nitrogen fertilizer solutions are manufactured at the Lima facility. In addition, carbon dioxide is produced as a co-product of ammonia manufacturing, and is processed by BOC Gas, Inc.

The process operations at PCS Nitrogen are classified under the Standard Industrial Classification (SIC) categories SIC 2873 (Nitrogenous Fertilizers) and SIC 2819 (Industrial Inorganic Chemicals, not elsewhere classified).

The process wastewaters generated from these operations are regulated under the following subparts in the Code of Federal Regulations (40 CFR), Part 418, "Fertilizer Manufacturing Point Source Category":

- Subpart B, Ammonia Subcategory
- Subpart C, Urea Subcategory
- Subpart D, Ammonium Nitrate Subcategory
- Subpart E, Nitric Acid Subcategory
- Subpart G, Mixed and Blended Fertilizer Production Subcategory

On an adjacent property, Ineous USA LLC manufactures acrylonitrile, acrylonitrile catalyst, butanediol, Barex resin, and recovers and purifies acetonitrile and hydrogen cyanide as co-products of acrylonitrile manufacturing. Process wastewaters from these facilities are routed to treatment systems at the Husky Lima Refinery, which are covered under Ohio EPA Permit Number 2IG00001. Non-contact cooling waters from Ineous USA LLC are discharged under the PCS Nitrogen permit at outfall 001.

The facility obtains its water from three sources. The City of Lima provides potable water and untreated reservoir water. PCS Nitrogen also obtains water from wells.

Description of Existing Discharge

PCS Nitrogen has four outfalls that discharge to the Ottawa River. (See Table 1.) Outfall 001 consists of process wastewater from the facility's fertilizer production, non-contact cooling water, cooling tower blowdown, steam generator blowdown, and storm water. Non-contact cooling water, cooling tower blowdown, and steam generator blowdown from the adjacent BP Chemicals plant mix with treated

Table 1. Description of PCS Nitrogen Outfalls

Outfall #	Type of Wastewater	Treatment System Used	Discharge Point	Avg.Discharge (in MGD) *
001	Treated process wastewater, non-contact cooling water, cooling tower blowdown, steam generator blowdown, and storm water	- ammonia stripping - ion exchange	Ottawa River	3.74
002	Storm water	none	Ottawa River	--
003	Storm water	none	Ottawa River	--
004	Storm water	none	Ottawa River	--
603	Process wastewater	none	Outfall 001	--

* Average flow rates as given in the NPDES renewal application.

process wastewater from PCS Nitrogen and discharge through PCS Nitrogen's outfall 001. The process and storm water discharged from outfall 001 is treated using ammonia stripping and ion exchange. The non-contact cooling water, cooling tower blowdown, and steam generator blowdown undergo neutralization and sedimentation prior to being discharged through outfall 001. (See Figure 2 on the next page for a schematic of the wastewater flows at the facility.)

The discharge from the process wastewater treatement system is monitored at internal station 603. Compliance with the applicable federal effluent guidelines for this facility is required at station 603.

Outfalls 002, 003, and 004 discharge storm water from the facility site. The storm water which is discharged from these outfalls is not treated. However, a portion of the storm water collected is treated using sedimentation and ion exchange and recycled. Sanitary wastewater is pretreated prior to being sent to the Lima Refinery wastewater treatment facilities.

Table 2 shows the reported flow rates at outfall 001 and internal station 603 since 2005. In general, this data shows that wastewater discharges at this facility have remained very consistent over the last five to six years.

Table 2. Flows Rates for Outfalls 001 and 603

Year	Outfall 001		Internal Station 603	
	50th Percentile	Maximum	50th Percentile	Maximum
2005	3.57	6.29	0.57	0.71
2006	3.6	5.49	0.52	0.71
2007	3.86	6.39	0.51	0.64
2008	3.68	6.25	0.49	0.72
2009	3.89	6.64	0.55	0.83
2010	3.69	9.56	0.55	0.79

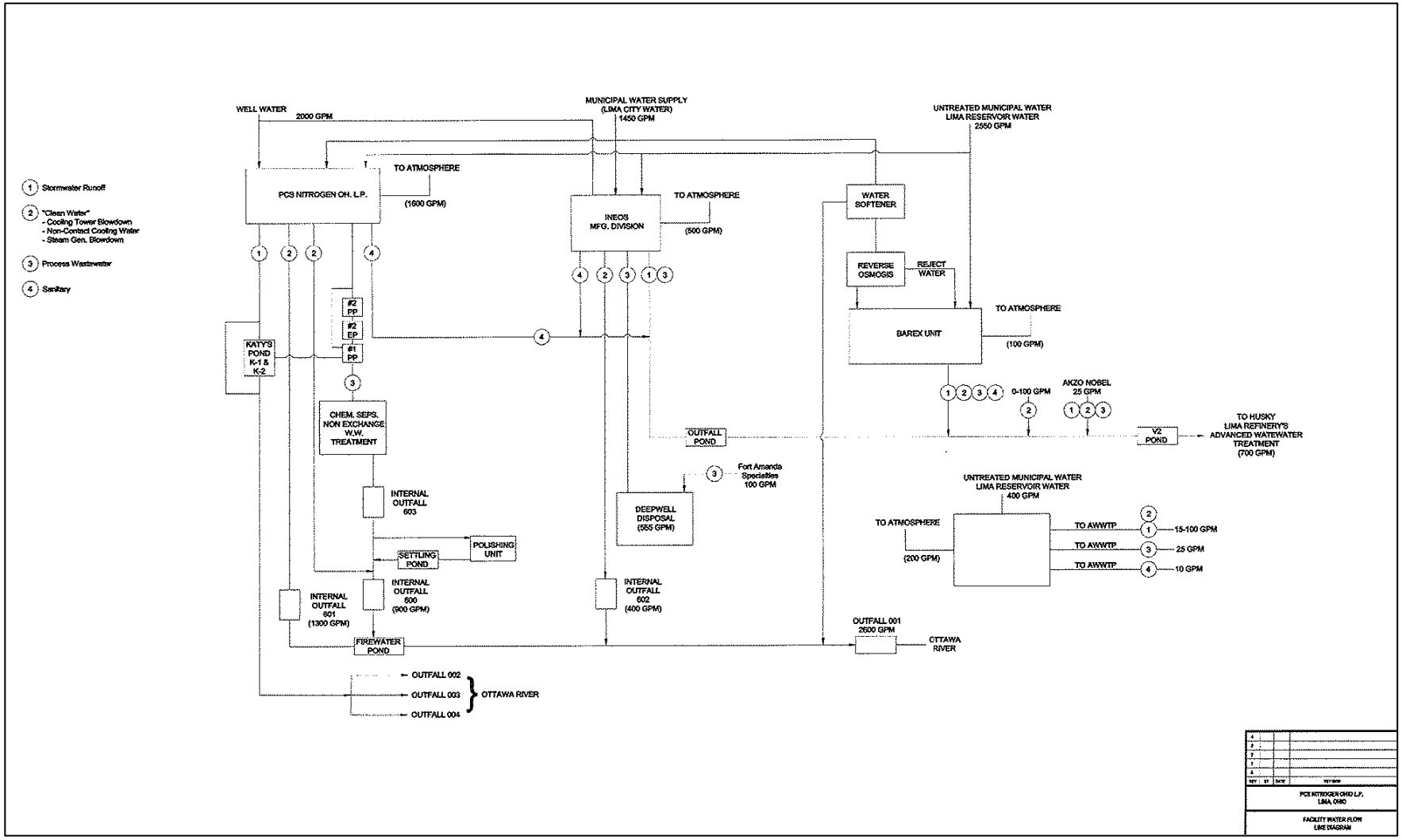

Figure 2. Wastewater Flow Schematic

Table 5 presents a summary of analytical results based upon effluent samples from outfall 001 compiled from the NPDES permit renewal application and samples from outfall 001 collected during Ohio EPA bioassay testing in 2009. Table 6 presents a summary of unaltered monthly operational report data for the period January 2005 through August 2010 for the PCS Nitrogen facility, as well as current permit limits, and monthly average PEQ_{avg} and daily maximum PEQ_{max} values.

Permit Violations

Since 2005, the PCS Nitrogen facility has reported relatively few sample results which are violations of permit limits. The majority of the pH violations (four violations of the pH minimum limit and four violations of the maximum limit) occurred in 2005 while violations for total residual oxidants (seven violations) occurred in 2007, 2009, and 2010. There were also seven violations for ammonia.

Water Quality of Receiving Waters/Record of Spills

Table 4 shows a summary of the water quality assessment in this watershed found in Ohio EPA's *2010 Integrated Report,* based upon the sampling conducted in 1996 and also sampling performed in 2001. The *Integrated Report* notes that the assessment data is more than ten years old, and therefore may not reflect current conditions.

Table 3. Division of Surface Water Watershed Assessment Unit Summary

Overview Information

Assessment Unit Name: Lima Reservoir – Ottawa River
Hydrologic Unit Code: 04100007 03 06
Assessment Unit Size: 27.4 square miles
Priority Points: 2
Monitoring Scheduled: 2010
TMDL Scheduled: 2013

Land Use Statistics

Developed	Forest	Grass/Pasture	Row Crops	Other
53.2%	9.9%	8.7%	27.5%	0.7%

Aquatic Life Use Assessment

Reporting Category: 5hx
Aquatic Life Uses: WWH, MWH-C
Sampling Years: 1996, 2001
Watershed Score: 15.0

Causes of Impairment:
- ► organic enrichment/D.O.
- ► priority organics
- ► un-ionized ammonia

Sources of Impairment:
- ► combined sewer overflows
- ► municipal point source
- ► industrial point source
- ► urban runoff/storm sewers

Comments: Available assessment data exceed 10 years in age; assessment unit will remain Category 5 until TMDLs are developed for all pollutants impairing all beneficial uses.

Recreation Use Assessment

Reporting Category: 3
Assessment Unit Score: not calculated

Public Drinking Water Supply Assessment

Reporting Category: 3i
Cause of Impairment: None
Nitrate Watch List: Yes
Pesticide Watch List: No

Fish Tissue Assessment

Reporting Category: 1
Causes of Impairment: None
Mercury Concentration: 317 ppb

The Ottawa River in the vicinity of Lima has historically been one of the most polluted waterbodies in Ohio. The following description is found in the 1997 report entitled, *Biological and Water Quality Study of The Ottawa River Basin*:

> "…A total of 82 miles of rivers and streams in the Ottawa River subbasin was assessed as part of the 1996 survey. Biological index scores indicated that 14 miles (17.3 %) were in full attainment of the Warmwater Habitat (WWH) biocriteria. Approximately 16 miles (19.3 %) were in partial attainment and 52 miles (63.4 %) were in non-attainment of WWH or Modified Warmwater Habitat (MWH) biocriteria…Ammonia, nutrients, organic enrichment, and pathogens were the leading causes…of the partial and non-attainment in the basin. The major sources were industrial and municipal point sources, combined sewer overflows (CSOs), and sanitary sewer overflows (SSOs)." [page 2]

Information specific to PCS Nitrogen appears on page 4 of this report:

> "…The segment of the Ottawa River showing the most severe impact to fish communities was downstream from the PCS Nitrogen outfalls...The highest percentages of DELT anomalies were also reported in this area."

Based upon initial data analysis from the current assessment of the Ottawa River in the vicinity of Lima, water quality has improved since the 1996 sampling was conducted.

Development of Water Quality-Based Effluent Limits

Determining appropriate effluent concentrations is a multiple-step process in which parameters are identified as likely to be discharged by a facility, evaluated with respect to Ohio water quality criteria, and examined to determine the likelihood that the existing effluent could violate the calculated limits. The PCS Nitrogen discharge is considered to be interactive with Lima WWTP, Premcor Lima Refinery and the Shawnee #2 WWTP. The CONSWLA model was used to distribute the loads of those conservative parameters requiring allocations. The study area is depicted in Figure 3 on the following page.

Table 4. Spills Reported at PCS Nitrogen: 2005 – 2010

Date	Material Spilled
4/25/2005	Ammonia
6/1/2005	Nitrous oxide
8/11/2005	Dust particles
9/29/2005	Nitrous oxide
3/8/2007	Wastewater
5/8/2007	Wastewater
2/23/2008	Ammonia
3/11/2008	Ammonia
7/31/2008	Nitric acid
8/5/2008	Stack release
10/9/2008	Nitric acid fumes
10/21/2008	Ammonia
12/15/2008	Ammonia
10/3/2009	Ammonia nitrogen
11/10/2009	Nitrous oxide
1/22/2010	Anhydrous ammonia

Parameter Selection

Effluent data for PCS Nitrogen were used to determine what parameters should undergo a wasteload allocation. The sources of effluent data are as follows:

Self-monitoring data (Discharge Monitoring Reports)	January 2005 through July 2010
Form 2.C. Application Data	2010
Ohio EPA data (compliance, survey)	2009

The effluent data were checked for outliers and no values were removed. This data was then used to calculate the estimated level of each pollutant in the effluent, otherwise referred to as the projected effluent quality (PEQ). The PEQ is calculated as both a monthly average value and a daily maximum value (PEQ_{avg} and PEQ_{max}, respectively). The PEQ values for this facility are presented in Table 10.

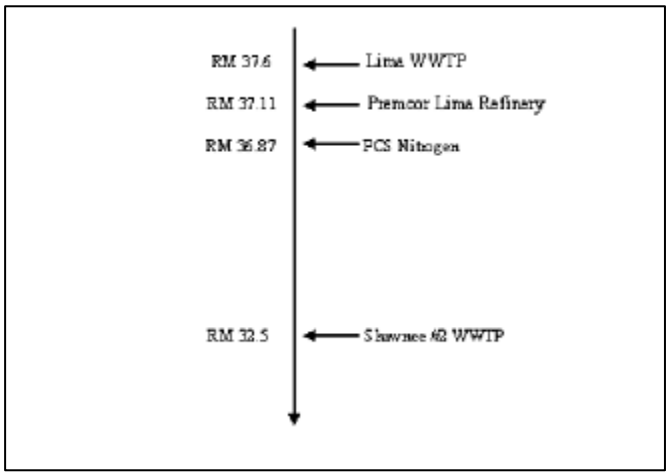

Figure 3. Ottawa River Study Area

Wasteload Allocation

For those parameters that require a wasteload allocation (WLA), the results are based on the uses assigned to the receiving waterbody in OAC 3745-1. The applicable waterbody uses for this facility's discharge and the associated stream design flows are as follows:

Aquatic life (WWH)		
Toxics (metals, organics, etc.)	Average	Annual 7Q10
	Maximum	Annual 1Q10
Ammonia-N	Average	Summer/winter 30Q10
Agricultural Water Supply		Harmonic mean flow
Human Health (nondrinking)		Harmonic mean flow

Allocations are developed using a percentage of stream design flow (as specified in Table 12), and allocations cannot exceed the Inside Mixing Zone Maximum criteria. The data used in the WLA are listed in Tables 11 and 12. The wasteload allocation values in Table 13 would allow the PCS Nitrogen facility to maintain all applicable water quality criteria.

Reasonable Potential

The preliminary effluent limits are the lowest average WLA (average PEL) and the maximum WLA (maximum PEL). To determine the reasonable potential of the discharger to exceed the WLA for each parameter, the facility's effluent quality is compared to the preliminary effluent limits. The average PEQ value (Table 10) is compared to the average PEL, and the maximum PEQ value is compared to the maximum PEL. Parameters that do not have a water quality standard (WQS) or do not require a WLA based on the initial screening are assigned to either group 1 or 2. Parameters are assigned to group 3, 4, or 5 depending on the magnitude of the PEQ value in relation to the allocated value or PEL. The groupings listed in Table 14 reflect the reasonable potential hazard assessment done according to WLA procedures.

Dissolved Metals Translators

A dissolved metals translator (DMT) is the factor used to convert a dissolved metal aquatic life criterion to an effective total recoverable aquatic life criterion with which a total recoverable aquatic life allocation can be calculated as required in the NPDES permit process. Currently, a DMT is based on site- or area specific field data; each field data sample consists of a total recoverable measurement paired with a dissolved metal measurement. For the Ottawa River, there were 5 such paired samples available applicable to cadmium, chromium, copper, lead, nickel, selenium, and zinc. To account for the limited quantity of data, the DMT for each of these metals was determined as the lower end of the 95% confidence interval (1 tail) about the geometric mean of the total recoverable-to-dissolved ratios of the sample pairs. A DMT for selenium could not be determined due to shortcomings in the data. A DMT for cadmium was not determined because all the samples were below the detection level. Each DMT is metal specific and is applied by multiplying the dissolved criteria by the DMT, resulting in total effective recoverable criteria which can be used in the wasteload allocation procedures.

In some cases, it is possible that the use of a DMT may result in instream concentrations of metals that may increase the risk of non-attainment of the use designation. This was evaluated for the PCS Nitrogen. The application of the dissolved metal translators resulted in effective total recoverable criteria that were higher than the total recoverable criteria listed in OAC 3745-1. Biological sampling conducted in 1996 showed that the Ottawa River near the PCS Nitrogen was not attaining its designated use; however, the non-attainment could not be attributed to metals from outfall 001. PCS Nitrogen has not requested any increase in permitted load. Therefore, the facility can receive permit limits up to their current permit limits without undergoing any further review to ensure that the limits for the metals will protect the biological criteria.

The DMTs used in the modeling for the Ottawa River are based on sample data collected in 1996 and may no longer be representative of current instream conditions. Should PCS Nitrogen wish to continue using DMTs for future wasteload allocations (beyond the 2010 permit), a new DMT analysis or study must be completed prior to the next permit renewal and submitted with the renewal application. (See paragraphs F and G in rule 3745-2-04 of the Ohio Administrative Code for requirements in developing a DMT study.)

Whole Effluent Toxicity WLA

Whole effluent toxicity or "WET" is the total toxic effect of an effluent on aquatic life in the receiving stream measured directly with a toxicity test. Acute WET measures short term effects of the effluent while chronic WET measures longer term and potentially more subtle effects of the effluent. WET values are then compared to a calculated wasteload allocation (WLA) value. This comparison, and an assessment of the instream community, are two ways in which whole effluent toxicity is evaluated.

The WLA calculations are similar to those for aquatic life criteria (using the chronic toxicity unit, TU_c, and the acute toxicity unit, TU_a). For PCS Nitrogen, the WLA values are as follows:

Outfall	TU_c	TU_a
001	6.62	0.31

The acute toxicity unit (TU_a) is defined as 100 divided by the LC50 for the most sensitive test species:

$$TU_a = \frac{100}{LC50}$$

This equation applies outside the mixing zone for warmwater, modified warmwater, exceptional warmwater, coldwater, and seasonal salmonid use designations.

The chronic toxicity unit (TU_c) is defined as 100 divided by the IC_{25}:

$$TU_c = \frac{100}{IC_{25}}$$

This equation applies outside the mixing zone for warmwater, modified warmwater, exceptional warmwater, coldwater, and seasonal salmonid use designations except when the following equation is more restrictive (Ceriodaphnia dubia only):

$$TU_c = \frac{100}{\text{geometric mean of NOEC and LOEC}}$$

When the acute wasteload allocation is less than 1.0 TUa, it may be defined as:

Dilution Ratio (downstream flow to discharger flow)	Allowable Effluent Toxicity (percent effects in 100% effluent)
up to 2 to 1	30
greater than 2 to 1 but less than 2.7 to 1	40
2.7 to 1 to 3.3 to 1	50

The acute wasteload allocation for PCS Nitrogen is 30 percent mortality in 100 percent effluent based on the dilution ratio of 1.3 to 1.

Effluent Limits/Hazard Management Decisions

The final effluent limits are determined by evaluating the groupings in conjunction with other applicable rules and regulations. Tables 15-001, 15-002, and 15-603 show the draft NPDES limits and monitoring requirements for PCS Nitrogen.

Federal and State laws/regulation require that dischargers meet both treatment-technology-based limits and any more stringent standards needed to comply with state WQS. Permit limits are based on the more restrictive of the two. Treatment-technology-based limits for PCS Nitrogen, found in 40 CFR Part 418, are based on the loadings of specific pollutants allowed to be discharged for any one day, and as a monthly average. Detailed explanation of the limits based upon 40 CFR 418 can be found in Attachment A of this document.

The limits and monitoring requirements recommended for each outfall are discussed in detail below. Unless otherwise indicated, the monitoring frequencies proposed in the draft permit are continued from the existing permit.

Outfall 001, Table 15-001: Risk Assessment Group 5

The Ohio EPA risk assessment (Table 14) places ammonia, total residual chlorine, free cyanide, mercury, selenium, and total dissolved solids (TDS) in group 5. For ammonia, chlorine, free cyanide,

mercury, and TDS this placement as well as the data in Tables 8 and 9 indicate that an environmental hazard exists and limits are necessary to protect water quality. Although selenium was also placed in Group 5, this placement was based upon only two samples which may not be representative of effluent quality. Using the discretion provided to the director of Ohio EPA in rule 3745-33-07(A)(5) of the Ohio Administrative Code, monitoring only is proposed for this pollutant. This will allow the compilation of a more complete dataset for the risk assessment of selenium when the permit is renewed in 2015.

Ammonia. The risk assessment placed ammonia in Group 5 and recommended 30-day average limits of 1.1 mg/l and 3.6 for the summer and winter seasons, respectively. The current ammonia permit limits are much higher than the recommended limits, and are based upon a Monte Carlo simulation conducted to show that water quality standards in the Ottawa River are being met downstream of the PCS Nitrogen discharge. Ohio EPA believes that the existing limits for ammonia should be continued for this permit. However, since the Monte Carlo simulation is more than 20 years old and may not accurately reflect current conditions in the river, PCS Nitrogen must submit the results of a new simulation (or comparable study) no later than 36 months after the effective date of the permit in order for Ohio EPA to consider alternative ammonia limits (i.e., limits less stringent than would be required by the default modeling procedures) when the permit is renewed in 2015.

Total Residual Chlorine. The risk assessment placed chlorine in Group 5 and recommended daily maximum limits of 0.020 mg/l. This pollutant was modeled interactively with the other dischargers, and because the City of Lima discharged chlorine during the past five years, the allocation for chlorine has become more stringent. A chlorine limit was not included in the existing permit since the permittee indicated that the cooling tower blowdown, the source of chlorine, also included bromine. Ohio EPA understands that chlorine and bromine continue to be discharged together, and as a result, monitoring for this pollutant is addressed with the permit requirements for total residual oxidants.

Free Cyanide. The existing limits for this pollutant are proposed to continue based upon the current risk assessment. In addition, the permit includes the continued implementation of the pollutant minimization program (PMP) for free cyanide as required in rule 3745-33-07(C) of the Ohio Administrative Code for a pollutant with a limit below the quantification level, discharging into the Lake Erie drainage basin.

Mercury. For mercury, the permittee has applied for coverage under the general mercury variance, Rule 3745-33-07(D)(10) of the Ohio Administrative Code. Based on the results of low-level mercury monitoring, the permittee has determined that its wastewater treatment plant cannot meet the 30-day average water quality-based effluent limit (WQBEL) of 1.3 nanograms per liter (ng/l).[1] However, the permittee believes that the facility will be able to achieve an annual average mercury effluent concentration of 12 ng/l. The variance application also demonstrated to the satisfaction of Ohio EPA that there is no readily apparent means of complying with the WQBEL without constructing prohibitively expensive end-of-pipe controls for mercury. Based on these factors, the permittee is eligible for coverage under the general mercury variance.

---

[1] As of November 2010, the use of mixing zones to determine the waste load allocation for bioaccumulative chemicals of concern (BCCs) is no longer allowed. This means that limits for BCCs after November 2010 must meet water quality standards with no allowances for dilution. Since mercury is considered a BCC, discharges must comply with water quality standards at that time. In order to obtain mercury effluent data which can be compared to the water quality standards, the permittee must use a low level method for mercury sampling and analysis.

Ohio EPA has reviewed the mercury variance application and has determined that it meets the requirements of the Ohio Administrative Code. Item H in Part II of the draft NPDES permit lists the provisions of the mercury variance, and includes the following requirements:

- a variance-based monthly average effluent limit of 10.5 ng/l, which was developed from sampling data submitted by the permittee;
- a requirement that the permittee make reasonable progress to meet the water-quality-based effluent limit for mercury by implementing the plan of study, which has been developed as part of the Pollutant Minimization Program (PMP);
- Low-level mercury monitoring of the plant's influent and effluent;
- a requirement that the annual average mercury effluent concentration is less than or equal to 12 ng/l as specified in the plan of study;
- a summary of the elements of the plan of study;
- a requirement to submit an annual report on implementation of the PMP; and
- a requirement for submittal of a certification stating that all permit conditions related to implementing the plan of study and the PMP have been satisfied, but that compliance with the monthly average water quality-based effluent limit for mercury has not been achieved.

In conjunction with the authorization of a mercury variance at outfall 001, mercury monitoring has been included at an influent station to the wastewater treatment unit, outfall 604. This monitoring data will be necessary in preparation of the pollutant minimization program for mercury and to fulfill the provisions of the general mercury variance in rule.

Total Dissolved Solids (or Total Dissolved Residue). The current permits for Lima, Lima Refining and PCS Nitrogen are based on a reallocation of total dissolved solids (TDS). In drafting this round of major permits for the Ottawa River dischargers, Ohio EPA has again re-allocated the dissolved solids loading among the dischargers. In the original allocation, all four of the dischargers were allocated an equal concentration of 1512 mg/l. When allocating multiple sources in a stream segment, the Director of Ohio EPA may distribute the loading among the dischargers using any appropriate method, based on site-specific considerations [OAC 3745-2-05(A)(8)]. A summary of this TDS wasteload allocation is shown below in Table 5. Lima Refining and PCS Nitrogen do not currently meet these allocations.

TDS is not a parameter that is easily treatable on an industrial scale. Dischargers needing to meet water quality-based TDS standards often rely on adding dilution to prevent TDS-related toxicity in the discharge. In this case, the City of Lima is providing dilution to the industries.

Based on this information, Ohio EPA is proposing to allocate more of the TDS load to the

Table 5. Default Allocation for Total Dissolved Solids

Discharger	TDS Waste Load (in mg/l)	PEQ (in mg/l)
Lima WWTP	1512	825
Lima Refining	1512	1544
PCS Nitrogen	1512	1537
Allen Co. Shawnee WWTP	1512	701

industrial facilities and less to the Lima WWTP. (TDS load cannot be reallocated from the Shawnee WWTP for the industries because doing so would shift the load upstream, creating a modeled exceedance of the WQS between the industries and the Shawnee WWTP.) This reallocation does not affect basic reasonable potential decisions - in any case the industrial discharges need limits for dissolved solids and Lima will only be required to monitor. This reallocation ensures that dischargers will be in compliance with effluent limits, as well as ensuring that the Ottawa River meets TDS standards. Lima still has room for growth in their allocation, based on comparing measured TDS effluent values against the wasteload allocation. We have also proposed changes to the water quality reopener clauses in each of these permits to allow further re-allocations if the City of Lima proposes to accept an industrial user discharging TDS.

The process described above is very similar to that used for the existing permits. For the current renewals, we have added 15 percent to the $PEQ_{maximum}$ effluent values for Lima Refining and PCS Nitrogen to derive the new allocation for these facilities. The remaining assimilative capacity is allocated to the Lima WWTP. Because of lower TDS discharges for the two industrial facilities, the results of this process means lower allocations for the two industrial facilities, and a slightly higher allocation for the Lima WWTP. The reallocation proposed for these permit renewals is summarized in Table 6.

Table 6. Re-Allocation of Total Dissolved Solids Load: 2010

Discharger	WLA Concentration (in mg/l)	WLA Load (in kg/day)	Reas. Pot. Group (PEQ as % of WLA)
Lima WWTP	1144	80,106	Group 4
Lima Refining Refinery	2431	50,520	Group 4
PCS Nitrogen	1956	32,060	Group 4
Allen Co. Shawnee WWTP	1512	11,446	Group 3

The above re-allocation is based upon a water quality standard of 1500 mg/l for TDS for the outside mixing zone average criteria. However, Ohio EPA believes that this standard, which has been in place for more than 30 years, may not be protective of water quality, and the Agency is currently in the process of investigating the possibility for lowering the WQS. It is important that PCS Nitrogen consider the likely consequences of more stringent TDS criteria for the subsequent permit renewal, and that a re-allocation of TDS load from the City of Lima may not be possible. Ohio EPA recommends actively exploring options for reducing and/or treating TDS during the next permit term.

Outfall 001, Table 15-001: Risk Assessment Group 4

Ohio EPA risk assessment (Table 14) places copper and urea in group 4. This placement supports that these parameters should not pose an environmental hazard and limits are not necessary to protect water quality. However, monitoring is recommended and has been included in the draft permit.

Outfall 001, Table 15-001: All Other Parameters

Dissolved Oxygen, $CBOD_5$, pH, Total Suspended Solids. Limits and monitoring requirements for dissolved oxygen (D.O.), $CBOD_5$, pH, and total suspended solids (TSS) are proposed to continue with

this permit renewal. Limits for pH are based upon water quality standards, while the D.O. and $CBOD_5$ limits are based upon the Monte Carlo simulation discussed above and will need to be re-evaluated for the next permit renewal due to the length of time since the simulation was conducted. In order to facilitate compliance monitoring, new parameters have been included to in the effluent table for outfall 001 to track excursions from the pH limits. (See Table 15-001.)

Water Temperature and Flow Rate. Monitoring for flow rate is proposed to continue in order to determine effluent quality and compliance with loading limits. Monitoring for temperature has been added to the effluent table for outfall 001 since PCS Nitrogen discharges non-contact cooling water and cooling tower blowdown through this outfall.

Nitrate Nitrogen, Phosphorus, and Total Residual Oxidants. Nitrate nitrogen is a pollutant related to the manufacturing process at PCS Nitrogen, and Ohio EPA believes it is important to continue monitoring for this parameter at the final outfall. Monitoring for phosphorus is also proposed to continue in order to maintain a current dataset for assessing the facility's nutrient contribution to the Ottawa River and potential water quality impacts. Limits and monitoring for total residual oxidants are proposed to continue in the event that PCS Nitrogen uses additives in the cooling water system which contain bromine. The limits are based upon recommendations from U.S. EPA for continuous discharges of bromine, and reflect the relative toxicity of this pollutant compared to chlorine.

Outfalls 002, 003, and 004: Table 15-002

Based upon a study conducted by the permittee, PCS Nitrogen constructed a 410,000 gallon storm water retention pond to significantly reduce or eliminate concentrations and loadings of ammonia-nitrogen and urea from outfalls 002 and 003. The pond which went into operation in 2008 has a valved discharge via a 24 inch sewer to a previously-existing retention pond (Katie's Pond). Collected storm water is discharged to Katie's Pond. From Katie's Pond, wastewater is pumped to the chemical separations unit for treatment and eventual discharge through outfall 001. Overflows from Katy's Pond are discharged through outfall 003.

Construction of the new pond has reduced the discharge events at outfall 002 significantly, however, outfall 003 continues to have a relatively high number of discharges. Based upon best engineering judgement, Ohio EPA believes that monitoring requirements at outfalls 002, 003, and 004 should be continued in this permit renewal.

Outfall 603: Table 15-603

This internal station monitors the facility's process wastewaters discharged from the ion exchange treatment system. Technology-based limits from the federal effluent guidelines for fertilizer manufacturing found in 40 CFR Part 418 are applied at this internal station. These limits are determined using the guideline numbers expressed in kilograms of pollutant per 1000 kilograms of production. The current daily production estimates for PCS Nitrogen used for this renewal are:

- 2054 Tons carbon dioxide
- 1867 tons ammonia product
- 581 tons of urea prilled
- 50 tons of urea solution
- 337 tons of nitric acid
- 350 tons of ammonium nitrate
- 624 tons of urea granulated

An example of the 30-day limit calculation for Subpart B, the Ammonia Subcategory is as follows:

BAT load = Effluent guideline (in kg of ammonia / 1000 kg of production)
x production (tons of product) x conversion factor
= 0.025 kg / 1000 kg of product x 1867 tons /day x 0.907 1000 kg/ton
= 42.33 kg/day

With the exception of the 30-day limits for nitrate, the limits at station 603 have become slightly more stringent based upon the new production data. For nitrate, the existing 30-day limits are proposed to continue since they are more stringent than most recent limit calculation.

Other Requirements

Part II of the permit includes requirements for signs to be placed at each outfall discharging to the Ottawa River, providing information about the discharge. Signage at outfalls is required pursuant to Ohio Administrative Code 3745-33-08(A).

As discussed on page 13 of this document, sample data collected in 1996 for development of dissolved metal translators (DMT) may no longer be representative of current instream conditions. In order to use dissolved metal translators for determination of effective water quality criteria for the next permit, PCS Nitrogen must submit the results of a new DMT study with permit renewal application.

As discussed previously in this document, the alternative limits for ammonia, $CBOD_5$, dissolved oxygen at outfall 001 are based upon an outdated Monte Carlo simulation. If PCS Nitrogen would like to continue alternative limits for these parameters at this outfall for the next permit, the results of a new study must be submitted no later than 36 months after the effective date of the permit. Any evaluation of alternative limits for this discharge must consider the recent water quality assessment of the Ottawa River and applicable recommendations included in the Ottawa River Watershed Total Maximum Daily Loads (TMDLs) which is scheduled to be completed in 2012.

Whole Effluent Toxicity Reasonable Potential

PCS Nitrogen conducted five acute toxicity tests form 2006 through 2009. The March 16, 2009 test resulted in 16.7 percent mortality for fathead minnows for one of the grab samples, while the April 27, 2009 composite test showed 5 percent mortality for Ceriodaphnia dubia. The other tests conducted by PCS Nitrogen showed no evidence of toxicity.

Ohio EPA conducted two screening bioassays in 2009, with the March test resulting in acute toxicity for both species based upon one of the grab samples (the composite sample showed toxicity for only fathead minnows) and the April test resulting in no evidence of toxicity. The tests conducted in 2009 by PCS Nitrogen were based upon splitting the samples collected by Ohio EPA. Since the March 2009

Table 7. Acute Toxicity Test Results

Test Date	Acute Toxicity (in TU_a)	
	Ceriodaphia dubia	**Fathead Minnows**
8/16/2006	AA	NT
8/29/2007	AA	NT
8/20/2008	AA	NT
3/16/2009	AA	AA
3/16/2009*	AA	1.0
4/27/2009	AA	AA
4/27/2009*	AA	AA

* Ohio EPA test.
** "NT" means not tested.

sample showed conflicting results, Ohio EPA believes that it is inappropriate to conclude the discharge triggers reasonable potential for toxicity. However, due to the variability in the testing results, quarterly toxicity monitoring for two years is proposed in the draft permit.

Table 8. Effluent Concentrations Based upon NPDES Application and Ohio EPA Bioassays

Parameter	NPDES Permit Renewal Application				Ohio EPA Bioassays	
	No. of Samples	Average*	Maximum	Long term average	March 16, 2009	April 27, 2009
Outfall 001						
Ammonia (mg/l)	1		1.95		9.79	4.14
Arsenic (ug/l)					3.6	4.4
Barium (ug/l)	12		70.		57.	56.
Bromide (mg/l)	52		0.02			
Bromoform (ug/l)					2.64	0.74
Calcium (mg/l)					151.	153.
Chemical Oxygen Demand (mg/l)	1		29.		29.	20.
Chlorides (mg/l)					218.	187.
Chlorine, Total Residual (mg/l)	52		0.02			
Chloroform (ug/l)					0.74	< 0.5
Chromium (ug/l)					2.2	2.2
Copper (ug/l)	4		19.		6.3	6.6
Cyanide, Total (mgl)	12		0.006			
Dissolved Solids, Total (mg/l)					1570.	1520.
Hardness (mg/l)					624.	662.
Iron (ug/l)					676.	880.
Magnesium (mg/l)					60.	68.
Manganese (ug/l)					29.	21.
Mercury (ng/l)	1		8.39			
Nickel (ug/l)					4.7	5.5
Nitrate-Nitrite (as N) (mg/l)	12		4.		4.38	4.74
Phosphorus (mg/l)	12		0.6		0.735	0.496
Selenium (ug/l)					4.0	5.7
Strontium (ug/l)					9120.	14000.
Total Kjeldahl Nitrogen (mg/l)					24.4	6.01
Total Organic Carbon (mg/l)	1		10.5			
Total Organic Nitrogen (mg/l)	1		1.07			

Table 9. Effluent Characterization and Decision Criteria: January 2005 – August 2010

Summary of analytical results for Outfalls 001, 002, 003, and 004. All values are in µg/l unless otherwise indicated. ND = below detection (detection limit); NA = not analyzed. Decision Criteria: PEQ_{avg} = monthly averages; PEQ_{max} = daily max. analytical results.

Parameter	Season	Units	Current Permit Limits		# Obs.	Percentiles		Data Range	Decision Criteria		
			30 day	Daily		50th	95th		# Obs.	PEQ_{ave}	PEQ_{max}
Outfall 001											
Dissolved Oxygen	Summer	mg/l	Not less than 4.0		136	7.7	8.63	6.6-9.6			
Dissolved Oxygen	Winter	mg/l	Not less than 4.0		133	8.8	9.7	7.4-10.5			
Dissolved Oxygen	Summer	kg/day			135	111	136	42.3-162			
Dissolved Oxygen	Winter	kg/day			133	115	150	49.6-192			
pH, Maximum	Annual	S.U.	Not more than 9.0		331	7.9	8.1	7.1-10.8			
pH, Minimum	Annual	S.U.	Not less than 6.5		331	7.6	7.9	2.9-8			
Residue, Total Dissolved	Annual	mg/l	2120	--	239	1360	1690	932-2020			
Residue, Total Dissolved	Annual	kg/day	34745	--	239	19400	24600	5440-33100			
Total Suspended Solids	Annual	mg/l	30	60	271	6	18	1-35			
Total Suspended Solids	Annual	kg/day	425	849	270	89.6	248	9.88-503			
Nitrogen, Ammonia (NH3)	Summer	mg/l	7.5	15	547	2.4	7.17	0.3-34.6			
Nitrogen, Ammonia (NH3)	Winter	mg/l	15	30	530	6.3	14	0.6-22.2			
Nitrogen, Ammonia (NH3)	Summer	kg/day	106	212	546	33.6	106	2.91-424			
Nitrogen, Ammonia (NH3)	Winter	kg/day	212	425	530	84.4	181	5.47-318			
Nitrogen, Nitrate (NO3)	Annual	mg/l	Monitor only		68	3.5	6.63	0.5-8			
Nitrogen, Nitrate (NO3)	Annual	kg/day			68	46.9	90.6	6.32-114			
Phosphorus, Total (P)	Annual	mg/l	Monitor only		68	0.9	1.4	0.1-1.8			
Phosphorus, Total (P)	Annual	kg/day			68	10.9	21.8	1.26-28.2			
Cyanide, Free	Annual	mg/l	0.0053	0.023	228	0	0.006	0-0.01			
Cyanide, Free	Annual	kg/day	0.065	0.28	228	0	0.0821	0-0.148			
Fluoride, Total (F)	Annual	mg/l			11	1.3	1.59	1-1.68			
Fluoride, Total (F)	Annual	kg/day			11	17	21.4	6.43-21.9			
Barium, Total Recoverable	Annual	ug/l	Monitor only		57	50	62.2	37-70			
Barium, Total Recoverable	Annual	kg/day			57	0.697	0.993	0.312-1.26			

Table 9. Effluent Characterization and Decision Criteria: January 2005 – August 2010

Summary of analytical results for Outfalls 001, 002, 003, and 004. All values are in µg/l unless otherwise indicated. ND = below detection (detection limit); NA = not analyzed. Decision Criteria: PEQ_{avg} = monthly averages; PEQ_{max} = daily max. analytical results.

Parameter	Season	Units	Current Permit Limits		# Obs.	Percentiles		Data Range	Decision Criteria		
			30 day	Daily		50th	95th		# Obs.	PEQ_{ave}	PEQ_{max}
Strontium, Total (Sr)	Annual	ug/l			1	9500	9500	9500-9500			
Strontium, Total (Sr)	Annual	kg/day			1	97.4	97.4	97.4-97.4			
Strontium, Total Recoverable	Annual	ug/l	Monitor only		56	9530	11500	4720-19600			
Strontium, Total Recoverable	Annual	kg/day			56	135	170	66.1-307			
Copper, Total Recoverable	Annual	ug/l	Monitor only		21	0	17	0-19			
Copper, Total Recoverable	Annual	kg/day			21	0	0.227	0-0.26			
Oxidants, Total Residual	Annual	mg/l	--	0.01	271	0.01	0.04	0-0.17			
Oxidants, Total Residual	Annual	kg/day			270	0.114	0.558	0-2.1			
Flow Rate	Summer	MGD			1030	3.85	4.74	0.77-9.56			
Flow Rate	Winter	MGD			964	3.53	4.44	1.21-6.64			
Flow Rate	Annual	MGD	Monitor only		1994	3.72	4.64	0.77-9.56			
Mercury, Total (Low Level)	Annual	ng/l	Monitor only		15	3.07	9.86	0-13.3			
Mercury, Total (Low Level)	Annual	kg/day			15	4.86E-05	0.000192	0-0.000225			
pH, Maximum	Annual	S.U.			1731	7.7	8.2	6.9-9.4			
pH, Minimum	Annual	S.U.			1731	7.5	7.9	5-8.2			
Urea	Annual	mg/l	Monitor only		70	9	49.7	0-102			
Urea	Annual	kg/day			70	131	778	0-1300			
CBOD 5 day	Summer	mg/l	8	16	136	3	7	1-11			
CBOD 5 day	Winter	mg/l	8	16	132	3	6	1-9			
CBOD 5 day	Summer	kg/day	113	226	135	43.6	109	5.22-160			
CBOD 5 day	Winter	kg/day	113	226	132	35.9	76.8	10.8-139			
Copper, Total Recoverable	Annual	ug/l			11	0	13	0-15			
Copper, Total Recoverable	Annual	kg/day			11	0	0.17	0-0.209			
Cyanide, Free	Annual	mg/l			43	0	0.007	0-0.023			
Cyanide, Free	Annual	kg/day			42	0	0.0977	0-0.261			

Table 9. Effluent Characterization and Decision Criteria: January 2005 – August 2010

Summary of analytical results for Outfalls 001, 002, 003, and 004. All values are in µg/l unless otherwise indicated. ND = below detection (detection limit); NA = not analyzed. Decision Criteria: PEQ_{avg} = monthly averages; PEQ_{max} = daily max. analytical results.

Parameter	Season	Units	Current Permit Limits		# Obs.	Percentiles		Data Range	Decision Criteria		
			30 day	Daily		50th	95th		# Obs.	PEQ_{ave}	PEQ_{max}
Outfall 002											
pH	Annual	S.U.	6.5 <= pH <= 9.0		17	8.5	8.82	7-8.9			
Nitrogen, Ammonia (NH3)	Summer	mg/l	Monitor only		7	24.8	263	14.2-322			
Nitrogen, Ammonia (NH3)	Winter	mg/l	Monitor only		10	44.7	330	3.4-424			
Nitrogen, Ammonia (NH3)	Summer	kg/day			7	4.37	15.8	1.22-16.1			
Nitrogen, Ammonia (NH3)	Winter	kg/day			10	1.06	53.7	0.0772-73.8			
Flow Rate	Summer	MGD			214	0	0.0052	0-0.195			
Flow Rate	Winter	MGD			291	0	0.0195	0-0.166			
Flow Rate	Annual	MGD	Monitor only		505	0	0.0148	0-0.195			
Urea	Annual	mg/l	Monitor only		17	177	1890	0-3600			
Urea	Annual	kg/day			17	7.36	831	0-1680			
Duration of Discharge	Annual	Hours	Monitor only		171	0	24	0-24			
Outfall 003											
pH	Annual	S.U.	6.5 <= pH <= 9.0		56	7.5	8.8	6.7-8.9			
Nitrogen, Ammonia (NH3)	Summer	mg/l	Monitor only		25	1.4	92.9	0.1-103			
Nitrogen, Ammonia (NH3)	Winter	mg/l	Monitor only		31	2.6	197	0.2-367			
Nitrogen, Ammonia (NH3)	Summer	kg/day			25	0.245	10.9	0.0053-23.5			
Nitrogen, Ammonia (NH3)	Winter	kg/day			31	0.374	25.7	0.0106-51.4			
Flow Rate	Summer	MGD			767	0	0.049	0-0.362			
Flow Rate	Winter	MGD			937	0	0.042	0-0.181			
Flow Rate	Annual	MGD	Monitor only		1704	0	0.0458	0-0.362			
Urea	Annual	mg/l	Monitor only		56	2.5	145	0-514			
Urea	Annual	kg/day			56	0.159	28.8	0-90			

Table 9. Effluent Characterization and Decision Criteria: January 2005 – August 2010

Summary of analytical results for Outfalls 001, 002, 003, and 004. All values are in µg/l unless otherwise indicated. ND = below detection (detection limit); NA = not analyzed. Decision Criteria: PEQ_{avg} = monthly averages; PEQ_{max} = daily max. analytical results.

Parameter	Season	Units	Current Permit Limits		# Obs.	Percentiles		Data Range	Decision Criteria		
			30 day	Daily		50th	95th		# Obs.	PEQ_{ave}	PEQ_{max}
Outfall 004											
pH	Annual	S.U.	6.5 <= pH <= 9.0		62	7.8	8.39	7.1-8.6			
Nitrogen, Ammonia (NH3)	Summer	mg/l	Monitor only		29	1.4	21.2	0.2-31.7			
Nitrogen, Ammonia (NH3)	Winter	mg/l	Monitor only		33	2.1	27.1	0.1-45.5			
Nitrogen, Ammonia (NH3)	Summer	kg/day			29	0.276	6.22	0.0106-11.2			
Nitrogen, Ammonia (NH3)	Winter	kg/day			33	0.429	23.6	0.00265-66			
Flow Rate	Summer	MGD			890	0	0.097	0-0.767			
Flow Rate	Winter	MGD			995	0	0.081	0-0.383			
Flow Rate	Annual	MGD	Monitor only		1885	0	0.0896	0-0.767			
Urea	Annual	mg/l	Monitor only		62	3	37.8	0-51			
Urea	Annual	kg/day			62	0.29	14.8	0-39.1			

Table 10. Effluent Data for PCS Nitrogen

Parameter	Units		# of Samples	# > MDL	Average PEQ	Maximum PEQ
Self-Monitoring (Discharge Monitoring Reports) Data						
Total Dissolved Solids [B]	mg/l		241	241	1537.	1701.
Ammonia	mg/l	S	371	371	3.408	6.528
Ammonia	mg/l	W	261	261	9.215	16.53
Nitrate	mg/l		68	68	5.985	8.547
Phosphorus	mg/l		68	68	1.560	2.336
Cyanide, free	µg/l		271	36	4.731	6.996
Fluoride	µg/l		11	11	1590.	1875.
Barium	µg/l		57	57	57.76	65.65
Strontium [B]	µg/l		59	59	11485.	13532.
Copper	µg/l		32	12	14.04	20.9
Oxidants, tot. res.	mg/l		271	144	0.031	0.046
Mercury [B]	ng/l		15	14	10.52	18.48
Urea	mg/l		70	60	60.94	90.16
Ohio EPA and Form 2.C. Application Data						
Arsenic	µg/l		2	2	12.21	16.72
Bromide	mg/l		52	--	0.015	0.020
Bromoform [A]	µg/l		2	2	7.323	10.03
Calcium	mg/l		2	2	424.4	581.4
Chlorides	mg/l		2	2	604.7	828.4
Chlorine, tot. res.	µg/l		52	--	15.0	20.0
Chloroform [A]	µg/l		2	1	2.053	2.812
Chromium, tot.	µg/l		2	2	6.103	8.36
Cyanide, tot.	µg/l		12	--	7.0	9.6
Iron	µg/l		2	2	2441.	3344.
Magnesium	mg/l		2	2	188.6	258.4
Manganese	µg/l		2	2	80.45	110.2
Nickel	µg/l		2	2	15.26	20.9
Nitrate+Nitrite	mg/l		14	--	5.19	7.11
Selenium	µg/l		2	2	15.81	21.66

[A.] Carcinogen
[B.] Combined LEAPS and Ohio EPA/2.C. Application Data

Table 11. Water Quality Criteria in the Study Area

Parameter		Units	Outside Mixing Zone Criteria: Average: Human Health [C]	Outside Mixing Zone Criteria: Average: Agri-culture	Outside Mixing Zone Criteria: Average: Aquatic Life [C]	Outside Mixing Zone Criteria: Maximum Aquatic Life [C]	Inside Mixing Zone Maximum [C]
Ammonia	S	mg/l	--	--	1.0	--	--
Ammonia	W	mg/l	--	--	3.3	--	--
Aluminum		µg/l	4500.	--	--	--	--
Arsenic		µg/l	580.	100.	150.	340.	680.
Antimony		µg/l	780.	--	190.	900.	1800.
Barium		µg/l	160000.	--	220.[A]	2000.[A]	4000.[A]
Benzene		µg/l	310.	--	160.[A]	700.[A]	1400.[A]
Bis(2-ethylhexyl)phthalate		µg/l	32.	--	8.4 [A]	1100.[A]	2100.[A]
Boron		µg/l	200000.	--	3900.[A]	33000.	65000.
Bromodichloromethane		µg/l	180.	--	340.[E]	3100.[E]	6200.[E]
Bromoform		µg/l	890.	--	230.[A]	1100.[A]	2200.[A]
Bromomethane		µg/l	2600.	--	16.[A]	38.[A]	75.[A]
Cadmium		µg/l	730.	50.	5.4	14.	28.
Chlorine, tot. res.		µg/l	--	--	11.	19.	38.
Chloroform		µg/l	1700.	--	140.[A]	1300.[A]	2600.[A]
Chromium^{+6}, diss.		µg/l	14000.	--	11.	16.	31.
Chromium, tot.		µg/l	14000.	100.	400.[D]	3100.[D]	6100.[D]
Copper		µg/l	64000.	500.	28.[D]	45.[D]	90.[D]
Cyanide, free		µg/l	48000.	--	5.2	22.	44.
Cyanide, total		µg/l	48000.	--	--	--	--
Dibromochloromethane		µg/l	150.	--	320.[E]	2900.[E]	5800.[E]
Ethylbenzene		µg/l	8900.	--	61.[A]	550.[A]	1100.[A]
Fluoride		µg/l	--	2000.	--	--	--
Iron		µg/l	--	5000.	--	--	--
Lead		µg/l	--	100.	25.[D]	490.[D]	970.[D]
Manganese		µg/l	61000.	--	--	--	--
Mercury [B]		µg/l	.0031	10.	0.91	1.7	3.4
Molybdenum		µg/l	10000.	--	20000.[A]	190000.[A]	370000.[A]
Nickel		µg/l	43000.	200.	130.[D]	1200.[D]	2400.[D]
Nitrate + Nitrite		mg/l	--	100.	--	--	--
Selenium		µg/l	3100.	50.	5.0	--	--
Strontium		µg/l	1400000.	--	21000.[A]	40000.	81000.
Tetrachloroethylene		µg/l	1800.	--	53.[A]	430.[A]	850.[A]
Total Dissolved Solids		mg/l	--	--	1500.	--	--
Urea		µg/l	--	--	17000.[A]	150000.[A]	300000.[A]
Zinc		µg/l	35000.	25000.	300.[D]	300.[D]	600.[D]

[A] Tier II
[B] Wildlife criteria also apply; 0.0013 µg/l.
[C] Human Health and Aquatic Life criteria are Tier I unless otherwise indicated.
[D] Effective criteria based on application of a dissolved metals translator.
[E] Screening Value.

Table 12. Instream Conditions and Discharger Flow

Parameter	Units		Value	Basis
7Q10	cfs	annual	2.17	USGS gage #03217400, 1961-73 data
1Q10	cfs	annual	1.87	USGS gage #03217400, 1961-73 data
90Q10	cfs	annual	3.45	USGS gage #03217400, 1961-73 data
30Q10	cfs	summer	2.6	USGS gage #03217400, 1961-73 data
30Q10	cfs	winter	4.6	USGS gage #03217400, 1961-73 data
Harmonic Mean Flow	cfs	annual	13.63	USGS gage #03217500, 1926-51 data
Mixing Assumption	%	average	25	Stream-to-discharge ratio
	%	maximum	100	Stream-to-discharge ratio
Instream Hardness	mg/l	annual	274.	Lima LEAPS 901&STORET Combined; 98 values, 2005-2010
Instream Temperature	ºC	summer	23.6	Lima LEAPS 901; 28 values, 2005-10
	ºC	winter	6.2	Lima LEAPS 901; 21 values, 2005-10
Instream pH	S.U.	summer	8.0	Lima LEAPS 901; 27 values, 2005-10
	S.U.	winter	8.0	Lima LEAPS 901; 21 values, 2005-10
Background Water Quality				
Ammonia	mg/l	summer	0.1	LEAPS 801; 26 values, 0<MDL, 2005-10
	mg/l	winter	0.06	LEAPS 801; 17 values, 0<MDL, 2005-10
Antimony	µg/l	annual	0.	No representative data available
Arsenic	µg/l	annual	2.1	STORET; 20 values, 8<MDL, 2010
Barium	µg/l	annual	50.5	STORET; 20 values, 0<MDL, 2010
Bis(2-EHP)	µg/l	annual	0.	No representative data available
Bromomethane	µg/l	annual	0.	No representative data available
Cadmium	µg/l	annual	0.	STORET; 20 values, 20<MDL, 2010
Chlorine, total res.	µg/l	annual	0.	No representative data available
Chromium^{+6}, diss.	µg/l	annual	0.	No representative data available
Chromium, tot.	µg/l	annual	0.	STORET; 20 values, 20<MDL, 2010
Copper	µg/l	annual	2.45	STORET; 20 values, 1<MDL, 2010
Cyanide, free	µg/l	annual	0.	No representative data available
Fluoride	µg/l	annual	0.	No representative data available
Iron	µg/l	annual	500.5	STORET; 20 values, 0<MDL, 2010
Lead	µg/l	annual	1.0	STORET; 20 values, 19<MDL, 2010
Mercury	µg/l	annual	0.	No representative data available
Molybdenum	µg/l	annual	0.	No representative data available
Nickel	µg/l	annual	4.05	STORET; 20 values, 0<MDL, 2010
Nitrate+Nitrite	mg/l	annual	0.845	STORET; 20 values, 6<MDL, 2010
Selenium	µg/l	annual	0.24	STORET; 20 values, 18<MDL, 2010
Strontium	µg/l	annual	1830.	STORET; 20 values, 0<MDL, 2010
TDS	mg/l	annual	504.	STORET; 24 values, 0<MDL, 2010
Urea	µg/l	annual	0.	No representative data available
Zinc	µg/l	annual	5.0	STORET; 20 values, 14<MDL, 2010

Table 12. Instream Conditions and Discharger Flows – continued.

Parameter	Units	Value	Basis
Dissolved Metal Translators			
Chromium, tot.		2.36	OEPA; 5 values, 0< MDL, 1996
Copper		1.30	OEPA; 5 values, 0< MDL, 1996
Lead		1.39	OEPA; 5 values, 0< MDL, 1996
Nickel		1.08	OEPA; 5 values, 0< MDL, 1996
Zinc		1.09	OEPA; 5 values, 0< MDL, 1996
PCS Nitrogen flow	cfs (mgd) annual avg.	6.7 (4.33)	DSW
Other Interactive Discharger Flows			
Lima WWTP	cfs(mgd) design	28.62 (18.5)	DSW
Premcor Lima Refinery	cfs(mgd) annual	8.49 (5.49)	DSW
Shawnee #2 WWTP	cfs(mgd) design	3.09 (2.0)	DSW

Table 13. Summary of Effluent Limits to Maintain Applicable Water Quality Criteria

Parameter	Units	Average Human Health	Average Agri Supply	Average Aquatic Life	Maximum Aquatic Life	Inside Mixing Zone Maximum
Ammonia - S	mg/l	--	--	1.1	--	--
Ammonia - W	mg/l	--	--	3.6	--	--
Barium	µg/l	49650. [A]	--	562.	5901. [A]	4000.
Chlorine, tot. res.	µg/l	--	--	11.	20.	38.
Copper	µg/l	68650.[A]	536.[A]	28. [D]	47. [D]	90. [D]
Cyanide, free	µg/l	51740.[A]	--	5.3	23.	44.
Fluoride	µg/l	--	6217.	--	--	--
Iron	µg/l	--	13370.	--	--	--
Mercury [C E]	µg/l	0.0031	10.[A]	0.91	1.7	3.4
Selenium	µg/l	3341.	54.	5.1	--	--
Strontium	µg/l	9856000. [A]	--	128700. [A]	259200.[A]	81000.
Total Dissolved Solids	mg/l	--	--	1512.	--	--
Urea	µg/l	--	--	112500.	1023000.[A]	300000.

[A] Allocation must not exceed the Inside Mixing Zone Maximum.
[C] Wildlife criteria WLA; 0.0013 µg/l.
[D] WLA based on applicable dissolved metal translator.
[E] Bioaccumulative Chemical of Concern (BCC); no mixing zone allowed after 11/15/2010, WQS must be met at end-of-pipe, unless the requirements for an exclusion are met as listed in 3745-2-08 (L).

Table 14. Parameter Assessment for Outfall 001

Group 1: Due to a lack of criteria, the following parameters could not be evaluated at this time.

Bromide	Calcium	Chlorides
Magnesium	Nitrate	Oxidants tot. res.
Phosphorus		

Group 2: PEQ < 25% of WQS or all data below minimum detection limit; WLA not required. No limit recommended, monitoring optional.

Arsenic	Bromoform	Chloroform
Chromium, tot.	Cyanide, tot.	Manganese
Nickel	Nitrate+Nitrite	

Group 3: PEQ_{max} < 50% of maximum PEL and PEQ_{avg} < 50% of average PEL. No limit recommended, monitoring optional.

Barium	Fluoride	Iron
Strontium		

Group 4: $PEQ_{max} \geq$ 50% but <100% of the maximum PEL or $PEQ_{avg} \geq$ 50% but < 100% of the average PEL. Monitoring is appropriate.

Copper	Urea

Group 5: Maximum PEQ $\geq$ 100% of the maximum PEL or average PEQ $\geq$ 100% of the average PEL, or either the average or maximum PEQ is between 75 and 100% of the PEL and certain conditions that increase the risk to the environment are present. Limit recommended.

Limits to Protect Numeric Water Quality Criteria

Parameter	Units	Applicable Period	Recommended Effluent Limits Average	Maximum
Ammonia	mg/l	summer	1.1	--
Ammonia	mg/l	winter	3.6	--
Chlorine, total res.	µg/l	summer only	11.	20.
Cyanide, free	µg/l	annual	5.3	23.
Mercury	µg/l	annual	.0013	1.7
Selenium	µg/l	annual	5.0	--
Total Dissolved Solids	mg/l	annual	1512.	--

Table 15-001. Final Effluent Limits and Monitoring Requirements for Outfall 001

		Effluent Limits				
		Concentration		Loading (kg/day)[a]		
Parameter	Units	30 Day Average	Daily Maximum	30 Day Average	Daily Maximum	Basis[b]
Water Temperature	F °	- - - - - - - - - - - -	Monitor	- - - - - - - - - - - - - - -		BEJ
Dissolved Oxygen	mg/l	- - - - - - - -	Not less than 4.0	- - - - - - - - - - - - -		EP/MS
Total Dissolved Residue	mg/l	- - - - - - - - - - - -	Monitor	- - - - - - - - - - - - - - -		BEJ
Total Suspended Solids	mg/l	30	60	425	849	EP
Ammonia						
Summer	mg/l	7.5	15	106	212	EP/MS
Winter	mg/l	15	30	212	425	EP/MS
Nitrogen, Nitrate	mg/l	- - - - - - - - - - - -	Monitor	- - - - - - - - - - - - - - -		BEJ
Phosphorus	mg/l	- - - - - - - - - - - -	Monitor	- - - - - - - - - - - - - - -		BEJ
Cyanide, Free	mg/l	0.0053	0.023	0.065	0.28	RP
Selenium, T. R.	ug/l	- - - - - - - - - - - -	Monitor	- - - - - - - - - - - - - - -		RP/BEJ
Copper, T. R.	ug/l	- - - - - - - - - - - -	Monitor	- - - - - - - - - - - - - - -		WLA
Oxidants, Total Res.	mg/l	--	0.01	--	--	BEJ
Flow Rate	MGD	- - - - - - - - - - - -	Monitor	- - - - - - - - - - - - - - -		M[c]
Mercury	ng/l	10.5	1700	0.00015	0.024	MVAR
pH Range Excursions,						
Maximum Duration	minutes	--	60	--	--	BEJ
Acute Toxicity						
Ceriodaphnia dubia	TU_a	- - - - - - - - - - - -	Monitor	- - - - - - - - - - - - - - -		BEJ
Fathead Minnows	TU_a	- - - - - - - - - - - -	Monitor	- - - - - - - - - - - - - - -		BEJ
pH	S.U.	- - - - - - - - - - - -	6.5 to 9.0	- - - - - - - - - - - - - -		WQS
Urea	mg/l	- - - - - - - - - - - -	Monitor	- - - - - - - - - - - - - - -		WLA
$CBOD_5$	mg/l	8	16	113	226	EP/MS
pH Range Excursions						
> 60 minutes	no.	--	0	--	--	BEJ
pH Range Excursions, Monthly						
Total Duration	minutes	--	446	--	--	BEJ

[a] Loadings have been based upon an average effluent flow of 3.74 MGD, except total dissolved residue loadings which are based upon 4.33 MGD.

Table 15-002. Final Effluent Limits and Monitoring Requirements for Outfalls 002, 003 and 004

		Effluent Limits				
		Concentration		Loading (kg/day)[a]		
Parameter	Units	30 Day Average	Daily Maximum	30 Day Average	Daily Maximum	Basis[b]
pH	S.U.	- - - - - - - - - - - -	6.5 to 9.0	- - - - - - - - - - - - - - -		WQS
Ammonia	mg/l	- - - - - - - - - - - -	Monitor	- - - - - - - - - - - - - - -		BEJ
Nitrogen, Nitrate	mg/l	- - - - - - - - - - - -	Monitor	- - - - - - - - - - - - - - -		BEJ
Flow Rate	MGD	- - - - - - - - - - - -	Monitor	- - - - - - - - - - - - - - -		M[c]
Urea	mg/l	- - - - - - - - - - - -	Monitor	- - - - - - - - - - - - - - -		BEJ
Duration of Discharge [e]	Hours	- - - - - - - - - - - -	Monitor	- - - - - - - - - - - - - - -		BEJ

[b,c] See page 34 for definition of terms and explanation of monitoring requirements.
[e] This parameter is included only for outfall 002.

Table 15-603. Final Effluent Limits and Monitoring Requirements for Station 603

		Effluent Limits				
		Concentration [d]		Loading (kg/day)[a]		
Parameter	Units	30 Day Average	Daily Maximum	30 Day Average	Daily Maximum	Basis[b]
Organic Nitrogen	mg/l	251.3	469.9	513.6	960.3	FEG-BAT
Ammonia	mg/l	177.4	349.7	362.5	714.7	FEG-BAT
Nitrogen, Nitrate	mg/l	13.0	44.1	26.6	90.1	FEG-BAT
Flow	MGD	- - - - - - - - - - - -	Monitor	- - - - - - - - - - - - - - -		M[c]

[b,c] See page 34 for definition of terms and explanation of monitoring requirements.
[d] Concentration limits are based upon the combined loading for all processes, divided by an effluent flow rate of 0.54 MGD and a conversion factor of 3.785.

[b] Definitions:

ABS = Antibacksliding Rule (OAC 3745-33-05(E) and 40 CFR Part 122.44(l));
AD = Antidegradation (OAC Rule 3745-1-05);
BA = Beach Act, and subsequent rules promulgated in November 2004 in 40 CFR Part 131;
BEJ = Best Engineering Judgement;
EP = Existing Permit;
FEG-BAT = Best Available Control Technology Currently Available, 40 CFR Part 414.91;
FEG-BPT = Best Practicable Waste Treatment Technology, 40 CFR Part 414.61 and Part 414.71;
M = Monitoring;
MS = **M**onte Carlo water quality **S**imulation for Ottawa River;
MVAR = Mercury Variance based limit [OAC 3745-33-07(D)(10)];
Penta = Dioxin monitoring using reporting code for toxicity equivalent due to the detection of pentachlorophenol (OAC 3745-33-07(A)(4));
RP = Reasonable Potential for exceeding water quality standards and requiring water quality-based effluent limits and monitoring requirements (OAC Rule 3745-33-07(A));
WET = Whole Effluent Toxicity (OAC Rule 3745-33-07(B)) ;
WLA = Wasteload Allocation procedures (OAC Rule 3745-2);
WLA/IMZM = Wasteload Allocation limited by Inside Mixing Zone Maximum;
WQS = Ohio Water Quality Standards (OAC Rule 3745-1).

[c] Monitoring of flow and other indicator parameters is specified to assist in the evaluation of effluent quality and treatment plant performance.

Attachment A. Federal Effluent Guidelines Applicable to PCS Nitrogen

40 CFR 418 Ammonia Subcategory Point Source Category

Best Practicable Control Technology currently available (BPT) 40 CFR 418.22

	----------BPT Effluent Limitations---------- (kilograms per 1,000 kg of product)	
Parameter	Daily Maximum	30-Day Average
Ammonia	0.1875	0.0625
pH	---------- 6.0 to 9.0 ----------	

Best Available Technology Economically Achievable (BAT) - 40 CFR 418.23

	----------BAT Effluent Limitations---------- (kilograms per 1,000 kg of product)	
Parameter	Daily Maximum	30-Day Average
Ammonia	0.05	0.025
pH	---------- 6.0 to 9.0 ----------	

40 CFR 418 Urea Subcategory Point Source Category

Best Practicable Control Technology currently available (BPT) 40 CFR 418.32(a)

	----------BPT Effluent Limitations---------- (kilograms per 1,000 kg of product)	
Parameter	Daily Maximum	30-Day Average
Ammonia	0.95	0.48
Organic Nitrogen	0.61	0.33

Best Available Technology Economically Achievable (BAT) - 40 CFR 418.33(a)

	----------BAT Effluent Limitations---------- (kilograms per 1,000 kg of product)	
Parameter	Daily Maximum	30-Day Average
Ammonia	0.53	0.27
Organic Nitrogen	0.45	0.24

Attachment A. Federal Effluent Guidelines Applicable to PCS Nitrogen (continued)

Best Available Technology Economically Achievable (BAT) - 40 CFR 418.33(b)

	----------BAT Effluent Limitations---------- (kilograms per 1,000 kg of product)	
Parameter	Daily Maximum	30-Day Average
Ammonia	0.53	0.27
Organic Nitrogen	0.86	0.46

40 CFR 418 Ammonium Nitrate Subcategory Point Source Category

Best Available Technology Economically Achievable (BAT) - 40 CFR 418.43(b)

	----------BAT Effluent Limitations---------- (kilograms per 1,000 kg of product)	
Parameter	Daily Maximum	30-Day Average
Ammonia	0.08	0.04
Nitrate	0.12	0.07

40 CFR 418 Nitric Acid Subcategory Point Source Category

Best Available Technology Economically Achievable (BAT) - 40 CFR 418.53(b)

	----------BAT Effluent Limitations---------- (kilograms per 1,000 kg of product)	
Parameter	Daily Maximum	30-Day Average
Ammonia	0.0045	0.00045
Nitrate	0.17	0.023