National Pollutant Discharge Elimination System (NPDES) Permit Program

FACT SHEET

Regarding an NPDES Permit To Discharge to Waters of the State of Ohio
For **Youngstown Wastewater Treatment Plant (WWTP)**

Public Notice No.: 15-05-008
Public Notice Date: May 15, 2015
Comment Period Ends: June 15, 2015

Ohio EPA Permit No.: **3PE00006*MD**
Application No.: **OH0028223**

Name and Address of Applicant:
City of Youngstown, City Hall
26 South Phelps Street
Youngstown, OH 44503

Name and Address of Facility Where Discharge Occurs:
City of Youngstown WWTP
725 Poland Avenue
Youngstown, Ohio 44502
Mahoning County

Receiving Water: Mahoning River
Subsequent Stream Network: Beaver River to Ohio River

Introduction

Development of a Fact Sheet for NPDES permits is mandated by Title 40 of the Code of Federal Regulations (CFR), Section 124.8 and 124.56. This document fulfills the requirements established in those regulations by providing the information necessary to inform the public of actions proposed by the Ohio Environmental Protection Agency (Ohio EPA), as well as the methods by which the public can participate in the process of finalizing those actions.

This Fact Sheet is prepared in order to document the technical basis and risk management decisions that are considered in the determination of water quality based NPDES Permit effluent limitations. The technical basis for the Fact Sheet may consist of evaluations of promulgated effluent guidelines, existing effluent quality, instream biological, chemical and physical conditions, and the relative risk of alternative effluent limitations. This Fact Sheet details the discretionary decision-making process empowered to the Director by the Clean Water Act (CWA) and Ohio Water Pollution Control Law (Ohio Revised Code [ORC] 6111). Decisions to award variances to Water Quality Standards (WQS) or promulgated effluent guidelines for economic or technological reasons will also be justified in the Fact Sheet where necessary.

No antidegradation review was necessary.

Effluent limits based on available treatment technologies are required by Section 301(b) of the CWA. Many of these have already been established by the United States Environmental Protection Agency (U.S. EPA) in the effluent guideline regulations (a.k.a. categorical regulations) for industry categories in 40 CFR Parts 405-499. Technology-based regulations for publicly-owned treatment works are listed in the Secondary Treatment Regulations (40 CFR Part 133). If regulations have not been established for a category of dischargers, the director may establish technology-based limits based on best professional judgment (BPJ).

Ohio EPA reviews the need for water-quality-based limits on a pollutant-by-pollutant basis. Wasteload allocations (WLAs) are used to develop these limits based on the pollutants that have been detected in the

discharge, and the receiving water's assimilative capacity. The assimilative capacity depends on the flow in the water receiving the discharge, and the concentration of the pollutant upstream. The greater the upstream flow, and the lower the upstream concentration, the greater the assimilative capacity is. Assimilative capacity may represent dilution (as in allocations for metals), or it may also incorporate the break-down of pollutants in the receiving water (as in allocations for oxygen-demanding materials).

The need for water-quality-based limits is determined by comparing the WLA for a pollutant to a measure of the effluent quality. The measure of effluent quality is called Projected Effluent Quality (PEQ). This is a statistical measure of the average and maximum effluent values for a pollutant. As with any statistical method, the more data that exists for a given pollutant, the more likely that PEQ will match the actual observed data. If there is a small data set for a given pollutant, the highest measured value is multiplied by a statistical factor to obtain a PEQ; for example if only one sample exists, the factor is 6.2, for two samples - 3.8, for three samples - 3.0. The factors continue to decline as samples sizes increase. These factors are intended to account for effluent variability, but if the pollutant concentrations are fairly constant, these factors may make PEQ appear larger than it would be shown to be if more sample results existed.

Summary of Permit Conditions

Most of the effluent limits and monitoring requirements proposed are the same as in the previous permit, although some monitoring frequencies have changed.

New water-quality-based effluent limits (WQBELs) are proposed for cadmium, free cyanide, total residual chlorine, and silver because these parameters have reasonable potential to exceed WQS. A compliance schedule is included in Part I.C of the permit for cadmium, free cyanide, and silver. A new free cyanide analytical method has been approved; details are in Part II of the permit.

New WQS for *E. coli* became effective in 2010 and are proposed to be implemented in this permit.

A lower maximum concentration and corresponding load limit for mercury is proposed. The lower limit is the WQS.

New monitoring is proposed for barium, bis(2-ethylhexyl) phthalate, selenium, and total filterable residue in order to gather data to determine the reasonable potential of these pollutants to exceed WQS.

Limits are proposed to be removed for zinc because there is no reasonable potential to exceed WQS. Monitoring is proposed to continue.

Monitoring requirements are proposed to be removed for chloroform because there is no reasonable potential to exceed WQS.

Annual chronic toxicity monitoring with the determination of acute endpoints is proposed for the life of the permit. This satisfies the minimum testing requirements of Ohio Administrative Code (OAC) 3754-33-07(B)(11) and will adequately characterize toxicity in the plant's effluent.

Three new plant bypass stations are being added in this permit. Two of the plant bypasses are internal and will be partially treated before combining with fully treated plant effluent; the combined flow discharges through the final outfall. See Facility Description below.

Fecal coliform monitoring is being removed from upstream and downstream monitoring stations 801 and 901 and will be replaced with *E. coli* monitoring.

New monitoring is proposed for the 38 Combined Sewer Overflow (CSO) stations listed in Part II, Item E of the permit, which are required to be inspected in accordance with Exhibit B of the March 5, 2002 Consent Decree in Civil Action No. 4:98CV2438. Overflow occurrence and estimated volume must be reported each year for the 38 CSO stations.

This permit no longer authorizes the use of method 4500 CN-I from Standard Methods for free cyanide testing. As soon as possible, the permittee must begin using either ASTM D7237-10 or OIA-1677-09 both of which are approved methods for free cyanide listed in 40 CFR 136.

In Part II of the permit, special conditions are included that address sanitary sewer overflow (SSO) reporting; CSO reporting, operator certification, minimum staffing and operator of record; whole effluent toxicity (WET) testing; storm water compliance; pretreatment program requirements; and outfall signage.

Table of Contents

Page

Introduction 1

Summary of Permit Conditions 2

Procedures for Participation in the Formulation of Final Determinations 6

Information Regarding Certain Water Quality Based Effluent Limits 6

Location of Discharge/Receiving Water Use Classification 8

Facility Description 8

Description of Existing Discharge 10

Assessment of Impact on Receiving Waters 10

Development of Water-Quality-Based Effluent Limits 11

Reasonable Potential/ Effluent Limits/Hazard Management Decisions 16

Other Requirements 18

List of Figures

Figure 1. Location of Youngstown Wastewater Treatment Plant 20

Figure 2. Diagram of Wastewater Treatment System 21

Figure 3. Mahoning River Study Area 22

List of Tables

Table 1. Effluent Violations for Outfall 001 25

Table 2. Average Annual Effluent Flow Rates 26

Table 3. Effluent Characterization Using Pretreatment Data and Ohio EPA Data 27

Table 4. Effluent Characterization Using Self-Monitoring Data 28

Table 5. Projected Effluent Quality 32

Table 6. Summary of Acute and Chronic Whole Effluent Toxicity Results 33

Table 7. Water Quality Criteria for Monte Carlo Model Parameters 34

Table 8. Monte Carlo Model Inputs 35

Table 9. Water Quality Criteria in the Study Area 38

Table 10. Instream Conditions and Discharger Flows for the CONSWLA Model.....40

Table 11. Summary of Effluent Limits to Maintain Applicable Water Quality Criteria.....44

Table 12. Parameter Assessment.....45

Table 13. Final Effluent Limits for Outfall 001 47

List of Attachments

Attachment 1. Combined Sewer Overflow Station List.....49

Procedures for Participation in the Formulation of Final Determinations

The draft action shall be issued as a final action unless the Director revises the draft after consideration of the record of a public meeting or written comments, or upon disapproval by the Administrator of the U.S. Environmental Protection Agency.

Within thirty days of the date of the Public Notice, any person may request or petition for a public meeting for presentation of evidence, statements or opinions. The purpose of the public meeting is to obtain additional evidence. Statements concerning the issues raised by the party requesting the meeting are invited. Evidence may be presented by the applicant, the state, and other parties, and following presentation of such evidence other interested persons may present testimony of facts or statements of opinion.

Requests for public meetings shall be in writing and shall state the action of the Director objected to, the questions to be considered, and the reasons the action is contested. Such requests should be addressed to:

Legal Records Section
Ohio Environmental Protection Agency
P.O. Box 1049
Columbus, Ohio 43216-1049

Interested persons are invited to submit written comments upon the discharge permit. Comments should be submitted in person or by mail no later than 30 days after the date of this Public Notice. Deliver or mail all comments to:

Ohio Environmental Protection Agency
Attention: Division of Surface Water
Permits Processing Unit
P.O. Box 1049
Columbus, Ohio 43216-1049

The Ohio EPA permit number and Public Notice numbers should appear on each page of any submitted comments. All comments received no later than 30 days after the date of the Public Notice will be considered.

Citizens may conduct file reviews regarding specific companies or sites. Appointments are necessary to conduct file reviews, because requests to review files have increased dramatically in recent years. The first 250 pages copied are free. For requests to copy more than 250 pages, there is a five-cent charge for each page copied. Payment is required by check or money order, made payable to Treasurer State of Ohio.

For additional information about this fact sheet or the draft permit, contact Sara Hise, (614) 644-4824, sara.hise@epa.ohio.gov.

Information Regarding Certain Water Quality Based Effluent Limits

This draft permit may contain proposed WQBELs for parameters that **are not** priority pollutants. (See the following link for a list of the priority pollutants: http://epa.ohio.gov/portals/35/pretreatment/Pretreatment_Program_Priority_Pollutant_Detection_Limits.pdf .) In accordance with ORC 6111.03(J)(3), the Director established these WQBELs after considering, to the extent consistent with the Federal Water Pollution Control Act, evidence relating to the technical feasibility and economic reasonableness of removing the polluting properties from those wastes and to evidence relating to conditions calculated to result from that action and their relation to benefits to the people of the state and to accomplishment of the purposes of this chapter. This determination was made based on data and information

available at the time the permit was drafted, which included the contents of the timely submitted NPDES permit renewal application, along with any and all pertinent information available to the Director.

This public notice allows the permittee to provide to the Director for consideration during this public comment period additional site-specific pertinent and factual information with respect to the technical feasibility and economic reasonableness for achieving compliance with the proposed final effluent limitations for these parameters. The permittee shall deliver or mail this information to:

Ohio Environmental Protection Agency
Attention: Division of Surface Water
Permits Processing Unit
P.O. Box 1049
Columbus, Ohio 43216-1049

Should the applicant need additional time to review, obtain or develop site-specific pertinent and factual information with respect to the technical feasibility and economic reasonableness of achieving compliance with these limitations, written notification for any additional time shall be sent to the above address no later than 30 days after the Public Notice Date on Page 1.

Should the applicant determine that compliance with the proposed WQBELs for parameters other than the priority pollutants is technically and/or economically unattainable, the permittee may submit an application for a variance to the applicable WQS used to develop the proposed effluent limitation in accordance with the terms and conditions set forth in OAC 3745-33-07(D). The permittee shall submit this application to the above address no later than 30 days after the Public Notice Date.

Alternately, the applicant may propose the development of site-specific WQS pursuant to OAC 3745-1-35. The permittee shall submit written notification regarding their intent to develop site specific WQS for parameters that are not priority pollutants to the above address no later than 30 days after the Public Notice Date.

Location of Discharge/Receiving Water Use Classification

Youngstown WWTP discharges to the Mahoning River at River Mile (RM) 19.43. Figure 1 shows the approximate location of the facility.

This segment of the Mahoning River is described by Ohio EPA River Code: 18-001, County: Mahoning, Ecoregion: Erie Drift Plain, U.S. EPA River Reach number 05030103-001. The Mahoning River is designated for the following uses under Ohio's WQS (OAC 3745-1-25): Warmwater Habitat (WWH), Agricultural Water Supply (AWS), Industrial Water Supply (IWS), and Class A Primary Contact Recreation (PCR).

Use designations define the goals and expectations of a waterbody. These goals are set for aquatic life protection, recreation use and water supply use, and are defined in the Ohio WQS (OAC 3745-1-07). The use designations for individual waterbodies are listed in rules -08 through -32 of the Ohio WQS. Once the goals are set, numeric WQS are developed to protect these uses. Different uses have different water quality criteria.

Use designations for aquatic life protection include habitats for coldwater fish and macroinvertebrates, warmwater aquatic life and waters with exceptional communities of warmwater organisms. These uses all meet the goals of the federal CWA. Ohio WQS also include aquatic life use designations for waterbodies which cannot meet the CWA goals because of human-caused conditions that cannot be remedied without causing fundamental changes to land use and widespread economic impact. The dredging and clearing of some small streams to support agricultural or urban drainage is the most common of these conditions. These streams are given Modified Warmwater [or MWH] or Limited Resource Water designations.

Recreation uses are defined by the depth of the waterbody and the potential for wading or swimming. Uses are defined for bathing waters, swimming/canoeing (PCR) and wading only (Secondary Contact - generally waters too shallow for swimming or canoeing).

Water supply uses are defined by the actual or potential use of the waterbody. Public Water Supply designations apply near existing water intakes so that waters are safe to drink with standard treatment. Most other waters are designated for AWS and IWS.

Facility Description

Youngstown WWTP was constructed in 1957 and last upgraded in 1987. The average design flow is 35 million gallons per day (MGD). Youngstown WWTP serves the City of Youngstown, Boardman Township, Austintown Township, and Liberty Township for an estimated total of 150,000 customers. Youngstown WWTP has the following treatment processes which are shown on Figure 2:

- Bar screening
- Preaeration
- Grit chambers
- Primary clarifiers
- Trickling filtration
- Activated sludge aeration
- Secondary clarifiers
- Microscreens
- Cascade aeration
- Chlorination/dechlorination

Youngstown WWTP has three bypasses that combine with plant effluent prior to discharge at station 001. Each bypass is proposed to have a monitoring station in this permit and the locations are shown on Figure 2. A gate at

the headworks allows for bypassing the entire plant combining after disinfection has been used once in 2013. This bypass is identified as station 602. After primary treatment, flow can bypass secondary treatment (trickling filters, aeration, microscreens) and is combined at disinfection. This bypass is identified as station 603. Flow in excess of 80 MGD can bypass the trickling filters and combine at either the microscreens or to the activated sludge aeration system. This bypass is identified as 604 and has never been used. Flow discharging from the trickling filter is considered fully treated. The activated sludge aeration system is utilized as a solids contact tank to remove excess solids from the trickling filter. Flow from the activated sludge aeration system is sent to secondary clarifiers and then to the microscreens. Flow in excess of 35 MGD is split between the activated sludge aeration system and the microscreens. The excess flow is not monitored as a bypass because the trickling filter provides full secondary treatment. After the microscreens flow is combined with fully treated effluent, then chlorinated, aerated, and dechlorinated before discharging to the receiving stream.

The City of Youngstown has 30% separated sewers and 70% combined sewers in the collection system. The City of Youngstown does have an approved pretreatment program. The City of Youngstown has 20 categorical users that discharge 0.377 MGD of flow and 11 significant non-categorical users that discharge 0.408 MGD of flow to the WWTP.

Youngstown WWTP utilizes the following sewage sludge treatment processes:

- Dewatering (belt filter press)
- Thickening (gravity and polymer addition)
- Incineration

Ash from the incineration process is disposed of in a municipal landfill.

Youngstown WWTP is covered under the following additional NPDES permit: industrial storm water general permit 3GR00928*EG (issued March 10, 2012).

Youngstown WWTP is subject to the conditions outlined in the Consent Order decree entered into with U.S. EPA, State of Ohio and the City of Youngstown (Civil Action No. 4:98CV2438 in the United States District Court for the Northern district of Ohio, Eastern Division, May 9, 2002). The decree addresses eliminating SSOs and developing a long-term control plan (LTCP) to eliminate CSOs. The final LTCP Technical Report, dated December 5, 2014, has been approved by US EPA on January 6, 2015 in accordance with Paragraphs 11 and 12 of the Consent Decree. The plan was submitted in accordance with U.S. EPA CSO policy which allows CSOs to occur only on a limited basis during wet weather conditions. The LTCP establishes an implementation schedule that will enable the City of Youngstown to comply with the requirements in its NPDES permit, the CWA, and Chapter 6111 of the ORC. The implementation schedule includes a two phased approach with the following specific control measures and/or requirements:

<u>Phase 1</u>

- Upgrade wastewater treatment plant to a capacity of 80 MGD;
- Construct a new 100 MGD wet weather treatment facility; and
- Eliminate CSOs to water of Mill Creek.

<u>Phase 2</u>

- Provide storage for four other CSOs in the system; and
- Investigate green infrastructure projects.

The LTCP addresses specifically the Phase 1 portion of the project that will be completed December 2033. The LTCP implementation schedule has an April 2037 milestone for submittal of Phase 2 project considerations.

Description of Existing Discharge

Youngstown WWTP had several effluent violations during the reporting period which are shown on Table 1. These violations were most likely caused by heavy rainfall overwhelming the collection system and plant capacity. The average annual effluent flow rate for Youngstown WWTP for the reporting period is presented on Table 2. Youngstown WWTP estimates there is an infiltration/inflow (I/I) rate to the collection system of 1.5 MGD.

Youngstown WWTP has 101 known CSOs (see Attachment 1). The City of Youngstown has already completed three sewer separation projects (Marshall Street, Andrews Avenue, and McGuffey Heights), one sewer improvement project (Woodland Avenue), and one CSO elimination project (Orchard Meadow). Youngstown WWTP will implement the nine minimum controls listed in Part II of the permit to control all 101 CSOs. Per the March 5, 2002 Consent Decree in Civil Action No. 4:98CV2438, direct monitoring will take place at 38 CSOs.

Under the provisions of 40 CFR 122.21(j), the Director has waived the requirement for submittal of expanded effluent testing data as part of the NPDES renewal application. Ohio EPA has access to substantially identical information through the submission of annual pretreatment program reports and/or from Ohio EPA effluent testing conducted.

Table 3 presents chemical specific data compiled from data reported in annual pretreatment reports and the Ohio EPA.

Table 4 presents a summary of unaltered Discharge Monitoring Report (DMR) data. Data are presented for the reporting period of January 2006 through September 2011, and current permit limits are provided for comparison.

Table 5 summarizes the chemical specific data for outfall 001 by presenting the average and maximum PEQ values.

Table 6 summarizes the results of acute and chronic WET tests of the final effluent.

Assessment of Impact on Receiving Waters

The Mahoning River mainsteam from Eagle Creek to the Pennsylvania border has been identified as a priority impaired water on Ohio's 303(d) list.

In September 2004, U.S. EPA Region 5 finalized the *Mahoning River Total Maximum Daily Load (TMDL) for Fecal Coliform Bacteria*. The TMDL addresses segments of the Mahoning River where the Primary Contact designated use was impaired by fecal coliform, including Eagle Creek, downstream to Mosquito Creek and Mill Creek, and further downstream to the Pennsylvania border. The report identified fecal coliform reductions necessary to meet the PCR recreational use. The TMDL recommends the elimination of all CSOs within the City of Youngstown collection system. This report is available through the following Internet link: http://epa.ohio.gov/dsw/tmdl/MahoningRiver.aspx#119916083-tmdl-report

Sampling in the Mahoning River basin was performed in 2013; however, no report is available. The most recently published Ohio EPA survey of the Mahoning River basin is the *Biological and Water Quality Study of the Mahoning River Basin* (Ohio EPA Technical Report MAS/1995-12-14; May 1, 1996). This report is available through the following Internet link:
http://www.epa.state.oh.us/portals/35/documents/mahon94.pdf

Large river assessment unit results for the Mahoning River mainstem downstream from Eagle Creek to the Pennsylvania border are presented in the *Ohio 2014 Integrated Water Quality Monitoring and Assessment*

Report. The report lists the Mahoning River watershed as impaired for aquatic life. Nutrients and organic enrichment/dissolved oxygen are listed as causes, and major municipal point sources and CSOs are listed as potential sources. A new TMDL is scheduled for 2016. The complete report is available through the following Internet link:
http://www.epa.state.oh.us/dsw/tmdl/OhioIntegratedReport.aspx

Development of Water-Quality-Based Effluent Limits

Determining appropriate effluent concentrations is a multiple-step process in which parameters are identified as likely to be discharged by a facility, evaluated with respect to Ohio water quality criteria, and examined to determine the likelihood that the existing effluent could violate the calculated limits.

Parameter Selection
Effluent data for the Youngstown WWTP were used to determine what parameters should undergo WLA. The parameters discharged are identified by the data available to Ohio EPA DMR data submitted by the permittee, compliance sampling data collected by Ohio EPA, and any other data submitted by the permittee, such as priority pollutant scans required by the NPDES application or by pretreatment, or other special conditions in the NPDES permit. The sources of effluent data used in this evaluation are as follows:

Self-monitoring data (DMRs)	January 2006 through September 2011
Pretreatment program and OEPA data	2007 through 2011

Outliers
The data were examined, and the following values were removed from the evaluation to give a more reliable PEQ: for nickel, one value of 205.3 µg/L; for cadmium, two values of 53.4 and 31.4 µg/L; for lead, three values of 434., 547. and 453. µg/L; for silver, 3 values of 118.6, 83.57 and 59.6 µg/L; for chromium, two values of 897. and 135.6 µg/L; and for mercury, one value of 139.4 ng/L.

This data is evaluated statistically, and PEQ values are calculated for each pollutant. Average PEQ (PEQ_{avg}) values represent the 95th percentile of monthly average data, and maximum PEQ (PEQ_{max}) values represent the 95th percentile of all data points (see Table 5).

The PEQ values are used according to Ohio rules to compare to applicable WQS and allowable WLA values for each pollutant evaluated. Initially, PEQ values are compared to the applicable average and maximum WQS. If both PEQ values are less than 25 percent of the applicable WQS, the pollutant does not have the reasonable potential to cause or contribute to exceedances of WQS, and no WLA is done for that parameter. If either PEQ_{avg} or PEQ_{max} is greater than 25 percent of the applicable WQS, a WLA is conducted to determine whether the parameter exhibits reasonable potential and needs to have a limit or if monitoring is required. See Table 9 for a summary of the screening results.

Wasteload Allocation
For those parameters that require a WLA, the results are based on the uses assigned to the receiving waterbody in OAC 3745-1. Dischargers are allocated pollutant loadings/concentrations based on the Ohio WQS (OAC 3745-1). Most pollutants are allocated by a mass-balance method because they do not degrade in the receiving water. As in past modeling studies, all facilities discharging to the Mahoning River mainstem between the Leavittsburg dam and the Ohio-Pennsylvania boundary are considered interactive and are included in the WLA:

Warren Steel Holdings (CSC Industries)	Thomas Steel Strip
BDM Warren (RG Steel)	ArcelorMittal-Warren
Warren WWTP	RMI-Niles
NRG Power (GenOn Niles)	Niles WWTP
McDonald Steel	Campbell WWTP

Youngstown WWTP
Struthers WWTP
Lowellville WWTP

Four dischargers located on tributaries are allocated separately from the mainstem discharges: Meander Creek WWTP (Meander Creek), Girard WWTP (Little Squaw Creek), Mosquito Creek WWTP (Mosquito Creek), and Boardman WWTP (Mill Creek). Travel time to and distance from the Mahoning River are considered large enough that, for modeling purposes, the effluents from the respective treatment plants are considered non-interactive with the direct dischargers to the Mahoning. Effluents from these four treatment plants were allocated to meet water quality standards for the conditions, habitat, and use designation for their particular receiving waters and separate Permit Support Documents were prepared for each facility. Monitoring was conducted downstream of these dischargers or at the mouths of these tributaries, however, for inputs into the Mahoning River mainstem model. A schematic representation of the study area can be found in Figure 3.

Dissolved Metals Translators
A DMT is the factor used to convert a dissolved metal aquatic life criterion to an effective total recoverable aquatic life criterion with which a total recoverable aquatic life allocation can be calculated as required in the NPDES permit process. Currently, a DMT is based on site- or area specific field data; each field data sample consists of a total recoverable measurement paired with a dissolved metal measurement. For Mahoning River, there were 5 such paired samples available applicable to copper, lead, and silver. To account for the limited quantity of data, the DMT for each of these metals was determined as the lower end of the 95% confidence interval (1 tail) about the geometric mean of the total recoverable-to-dissolved ratios of the sample pairs. A DMT for zinc, cadmium, chromium, and nickel could not be determined due to shortcomings in the data. Each DMT is metal specific and is applied by multiplying the dissolved criteria by the DMT, resulting in total effective recoverable criteria which can be used in the WLA procedures.

Modeling Approach
Appropriate effluent concentrations for dischargers to the Mahoning River were determined using two models: a Monte Carlo model for the six commonly allocated metals (cadmium, chromium [total], copper, lead, nickel, and zinc) and the conventional Ohio EPA Conservative Substance Wasteload Allocation Model (CONSWLA) for all other parameters. The models and their applications are discussed in the sections that follow and model inputs are presented.

Ohio WQS were used for all parameters except for chronic cadmium, chronic lead, chronic hexavalent chromium (dissolved), chronic selenium and chronic iron. The Mahoning River enters Pennsylvania at about RM 11.43, and Pennsylvania WQS must be met at that point. The Pennsylvania Aquatic Life criteria and Human Health criteria were met at the state line for all other parameters (metals and organics).

Flows in the Mahoning River are contributed by a series of reservoirs in the headwaters and on Mosquito Creek, controlled and mostly owned by the U.S. Army Corps of Engineers. Constructed several decades ago to provide adequate flow for the steel industry of the Mahoning River valley, the reservoirs are operated on a schedule to maintain specific seasonal flows at Leavittsburg and Youngstown. The operation of the reservoir system is discussed at length in earlier U.S. EPA Mahoning River studies (Amendola et al., 1977; Schregardus and Amendola, 1984).

The Monte Carlo Model
The application of the Monte Carlo method was limited to the six commonly allocated metals (cadmium, chromium [total], copper, lead, nickel, and zinc). Previous allocations, using the conventional Ohio EPA conservative parameter model, resulted in stringent limits for these parameters that have been difficult for dischargers to maintain. As a result, the Ohio EPA was asked to consider other methods for determining effluent limits that would adequately protect the river while allowing the dischargers some relief. The Monte Carlo method addresses these concerns but does not guarantee more favorable discharge limits. This is the third permit cycle where a Monte Carlo method was used to determine the WLA for the six metals listed above.

Conventional water quality modeling methods project the receiving water pollutant concentration which will occur under critical low-flow conditions. The Monte Carlo probabilistic method, as applied to water quality modeling, projects the year-round probability distribution for the pollutant. This allows a more accurate determination of the frequency at which water quality criteria are violated or maintained. Conventional modeling methods, when applied to systems with numerous dischargers, may be overly conservative because they model all dischargers at their maximum permitted concentration. The more dischargers modeled, the more unlikely it is that all will discharge at their maximum level at the same time and at critical low-flow conditions. The Monte Carlo method accounts for the independent variability of discharges as well as other model inputs.

The Monte Carlo model for the Mahoning River was originally developed by Limno-Tech, Inc., for their 1993 study to determine alternative copper limits for Thomas Strip Steel. The model combines the Monte Carlo statistical method with a multi-discharge mass-balance model and allows upstream flow to be input from a historical gaging station flow record, in order to account for unusual flow fluctuations caused by the numerous upstream dams and reservoirs. Ohio EPA approved the alternative limits developed using this model and received permission to modify and apply the model in the future. The original model was written in 1992-1993 in Borland Pascal. For this permit cycle, the model has been modified by the Ohio EPA and re-written in the 'C' programming language.

River Hardness and Water Quality Criteria

Water quality criteria for the six metals depends on instream hardness. Thus, hardness is a key element in determining effluent limits. A detailed analysis of the available hardness and flow data was conducted. This analysis revises and updates the Ohio EPA analysis previously performed in 2002. Stream hardness data was taken from the two main gaging stations on the Mahoning River main stem, at Leavittsburg, Ohio (RM 45.51) and at Lowellville, Ohio (RM 12.42). The hardness data for the two stations was analyzed for the period January 1997 to October 2006.

A linear correlation between the Leavittsburg United States Geological Survey (USGS) gaging station flow and instream hardness was determined for both stations. These correlations were then used to calculate hardness as a function of river mile at 129 cubic feet per second (cfs) (Leavittsburg 1Q10 low flow) and 136 cfs (7Q10 low flow).

Acute Criteria, at 1Q10

$$\text{river hardness (mg/L)} = (-0.575)(\text{river mile}) + 184.534$$

Chronic Criteria, at 7Q10

$$\text{river hardness (mg/L)} = (-0.575)(\text{river mile}) + 184.291$$

Discharger hardness was calculated with these equations. This relationship established local river hardness for calculating outside-mixing-zone, hardness-dependent criteria in the Monte Carlo model. Inside-mixing-zone, maximum criteria were determined with effluent hardness data when available, or outside-mixing-zone hardness when effluent data was unavailable.

Table 7 contains the water quality criteria for the six metals in the vicinity of the Youngstown WWTP.

This Monte Carlo method uses a thirty-day averaging period with a ten-year return period for meeting chronic (average) water quality criteria. A one-day averaging period with a ten-year return period is used for meeting the acute (maximum) water quality criteria. Since the chronic aquatic life criteria are less than or approximate to both the agriculture and human health criteria and since the return periods for both agriculture and human health criteria would be longer than ten years, the allocations that meet the average aquatic life criteria will be protective of the agriculture and human health criteria as well.

Federal rules require that a downstream state's water quality criteria be considered when calculating effluent limits. The Pennsylvania state line is at RM 11.43. Pennsylvania's standards are the same as Ohio's for copper, total chromium, nickel, and zinc. However, Pennsylvania's standards for cadmium and lead are more stringent than Ohio's and had to be considered. Since Pennsylvania uses, in effect, a one hundred-day return period, Ohio's acute criteria for those two metals, in combination with a ten-year return period, still meet Pennsylvania's water quality criteria. However, the same is not true for the chronic criteria, such as total filterable residue (dissolved solids).

Ohio EPA evaluated instream total filterable residue data collected in the Mahoning River at Lowellville, approximately one mile from the Ohio-Pennsylvania border (number of samples collected = 128, range = 164 – 650 mg/L, period of record = January 1999 – January 2012). The Agency calculated summer and winter concentrations to characterize instream total filterable residue levels. These concentrations are 95th percentiles of the monthly averages and daily values of the data. The calculated values are: monthly average – 364 mg/L (summer), 456 mg/L (winter); maximum – 423 mg/L (summer), 587 mg/L (winter).

These values are lower than the monthly average and maximum Pennsylvania total filterable residue standards, 500 mg/L and 750 mg/L, respectively. This demonstrates that currently there is no reasonable potential for the instream total filterable residue concentration to exceed the Pennsylvania standards at Lowellville, close to the state line. Based on this finding, WQBELs based on Pennsylvania standards for total filterable residue are not currently necessary for Ohio wastewater facilities discharging at their existing total filterable residue loads.

Ohio EPA is pursuing a plan to begin regular total filterable residue monitoring at a site in the lower part of the Mahoning River in Ohio. This monitoring would provide additional baseline data on ambient total filterable residue concentrations with Ohio facilities discharging at their existing total filterable residue loads. The Agency will consider options for reducing the total filterable residue load to the Mahoning River if an upward trend in the ambient concentration is observed

Ohio EPA will evaluate proposals for new or increased total filterable residue loadings to the Mahoning River from Ohio NPDES dischargers, which could be subject to provisions of Ohio's antidegradation rule (OAC 3745-1-05).

Data Analysis for the Monte Carlo Model

The Monte Carlo method accounts for individual system component variability by generating probability distributions that predict a range of possible input conditions. These distributions are derived from the mean and the coefficient of variation input by the user and based on field data for each of these components. Table 8 lists the calculated mean and coefficient of variation for such system characteristics as background/ambient concentrations and discharger and tributary flows.

The Conservative Substance Wasteload Allocation Model

The CONSWLA was used to allocate all parameters not included in the Monte Carlo model. CONSWLA is the model Ohio EPA typically uses in multiple discharger situations. Contrary to the Monte Carlo model, described above, CONSWLA model inputs for flow are fixed at their critical low levels and inputs for effluent flow are fixed at their design or 50th percentile levels. Background concentrations are fixed at a representative value (generally a 50th percentile). A mass balancing method is then used to allocate effluent concentrations that maintain WQS under these conditions. This technique is appropriate when data bases are unavailable to generate statistical distributions for inputs (like those used in the Monte Carlo method) and if the parameters modeled are conservative.

The applicable waterbody uses for this facility's discharge and the associated stream design flows are as follows:

Aquatic life (WWH)

Toxics (metals, organics, etc.)	Average	Annual 7Q10
	Maximum	Annual 1Q10
Ammonia	Average	Summer 30Q10
		Winter 30Q10
AWS		Harmonic mean flow
Human Health (nondrinking)		Harmonic mean flow

Allocations are developed using a percentage of stream design flow as specified in Table 10, and allocations cannot exceed the Inside Mixing Zone Maximum (IMZM) criteria.

Ohio's WQS implementation rules [OAC 3745-2-05(A)(2)(d)(iv)] required a phase out of mixing zones for bioaccumulative chemicals of concern (BCCs) as of November 15, 2010. This rule applied statewide. Mercury is a BCC. The mixing zone phase-out means that as of November 15, 2010 all dischargers requiring mercury limits in their NPDES permit must meet WQS at the end-of-pipe, which for mercury are 12 ng/L (average) and 1700 ng/L (maximum) in the Ohio River basin.

The data used in the WLA and CONSWLA are listed in Table 9 and Table 10. The results to maintain all applicable criteria are presented in Table 11.

Whole Effluent Toxicity WLA
Whole effluent toxicity (WET) is the total toxic effect of an effluent on aquatic life measured directly with a toxicity test. Acute WET measures short term effects of the effluent while chronic WET measures longer term and potentially more subtle effects of the effluent.

WQS for WET are expressed in Ohio's narrative "free from" WQS rule [OAC 3745-1-04(D)]. These "free froms" are translated into toxicity units (TUs) by the associated WQS Implementation Rule (OAC 3745-2-09). WLAs can then be calculated using TUs as if they were water quality criteria.

The WLA calculations for WET are similar to those for aquatic life criteria - using the chronic toxicity unit (TU_c) and 7Q10 flow for the average and the acute toxicity unit (TU_a) and 1Q10 flow for the maximum. These values are the levels of effluent toxicity that should not cause instream toxicity during critical low-flow conditions. For Youngstown WWTP, the WLA values are 0.94 TU_a and 5.41 TU_c.

The chronic toxicity unit (TU_c) is defined as 100 divided by the estimate of the effluent concentration which causes a 25% reduction in growth or reproduction of test organisms (IC_{25}):

$$TU_c = 100/IC_{25}$$

This equation applies outside the mixing zone for warmwater, modified warmwater, exceptional warmwater, coldwater, and seasonal salmonid use designations except when the following equation is more restrictive (*Ceriodaphnia dubia* only):

TU_c = 100/geometric mean of No Observed Effect Concentration and Lowest Observed Effect Concentration

The acute toxicity unit (TU_a) is defined as 100 divided by the concentration in water having 50% chance of causing death to aquatic life (LC_{50}) for the most sensitive test species:

$$TU_a = 100/LC_{50}$$

This equation applies outside the mixing zone for warmwater, modified warmwater, exceptional warmwater, coldwater, and seasonal salmonid use designations.

When the acute WLA is less than 1.0 TU_a, it may be defined as:

Dilution Ratio (downstream flow to discharger flow)	Allowable Effluent Toxicity (percent effects in 100% effluent)
up to 2 to 1	30
greater than 2 to 1 but less than 2.7 to 1	40
2.7 to 1 to 3.3 to 1	50

The acute WLA for Youngstown WWTP is 50 percent mortality in 100 percent effluent based on the dilution ratio of 3.1 to 1.

Reasonable Potential/ Effluent Limits/Hazard Management Decisions

After appropriate effluent limits are calculated, the reasonable potential of the discharger to violate the WQS must be determined. Each parameter is examined and placed in a defined "group". Parameters that do not have a WQS or do not require a WLA based on the initial screening are assigned to either group 1 or 2. For the allocated parameters, the preliminary effluent limits (PEL) based on the most restrictive average and maximum WLAs are selected from Table 11. The average PEL (PEL_{avg}) is compared to the average PEQ (PEQ_{avg}) from Table 5, and the PEL_{max} is compared to the PEQ_{max}. Based on the calculated percentage of the allocated value [($PEQ_{avg} \div PEL_{avg}$) X 100, or ($PEQ_{max} \div PEL_{max}$) X 100)], the parameters are assigned to group 3, 4, or 5. The groupings are listed in Table 12.

The final effluent limits are determined by evaluating the groupings in conjunction with other applicable rules and regulations. Table 13 presents the final effluent limits and monitoring requirements proposed for Youngstown WWTP outfall 001 and the basis for their recommendation. Unless otherwise indicated, the monitoring frequencies proposed in the permit are continued from the existing permit.

Water Temperature and Flow Rate
Monitoring for these parameters is proposed to continue in order to evaluate the performance of the treatment plant.

Ammonia, Carbonaceous Biochemical Oxygen Demand (5 day), Dissolved Oxygen, and Total Suspended Solids
The limits proposed for dissolved oxygen, total suspended solids, ammonia and 5-day carbonaceous biochemical oxygen demand are all based on plant design criteria. These limits are protective of WQS.

E. coli, Oil & Grease, and pH
Limits proposed for oil and grease, pH, and *E. coli* are based on WQS (OAC 3745-1-07). WQS for *E. coli* became effective in March 2010 and take the place of fecal coliform testing. Class A PCR *E. coli* standards apply to this segment of the Mahoning River. For Youngstown WWTP, monthly and weekly geometric mean concentrations of 126 and 284 per 100 mL are proposed.

Cadmium, Chlorine – Total Residual, Cyanide – Free, Mercury, and Silver
The Ohio EPA risk assessment (Table 12) places these parameters in group 5. This placement, as well as the data in Table 3, Table 4, and Table 5 indicates that the reasonable potential to exceed WQS exists and limits are necessary to protect water quality. For these parameters, the PEQ is greater than 100 percent of the WLA. Pollutants that meet this requirement must have permit limits under OAC 3745-33-07(A)(1).

The maximum daily mercury concentration limit is proposed to be lowered to the WQS and the loading limit lowered accordingly. New limits are proposed for cadmium, free cyanide, and silver. A 36 month compliance schedule to meet the limits is included in Part I.C of the permit. Because the compliance schedules extend beyond the permit expiration date, the new limits are not included in 3PE00006*MD, but are listed in Table 13.

New free cyanide testing methods have now been approved. Details are in Part II of the permit.

Bis(2-ethylhexyl)phthalate, Selenium, and Total Filterable Residue
The Ohio EPA risk assessment (Table 12) places these parameters in group 5, which recommends limits to protect water quality. Using the discretion allowed the Director under OAC 3745-33-07(A)(5), monitoring rather than limits is proposed for these parameters. The PEQ values calculated for these parameters (Table 5) may not be representative of the actual levels in the plant effluent because they were based on a small number of data points. The purpose of the proposed monitoring is to collect additional data on the frequency of occurrence and variability of these pollutants in the plant's effluent.

Barium
The Ohio EPA risk assessment (Table 12) places this parameter in group 4. This placement, as well as the data in Table 3, Table 4, and Table 5, support that this parameter does not have the reasonable potential to contribute to WQS exceedances, and limits are not necessary to protect water quality. Monitoring for Group 4 pollutants (where PEQ exceeds 50 percent of the WLA) is required by OAC 3745-33-07(A)(2). New monitoring is proposed to collect additional data on the frequency of occurrence and variability of this pollutant in the plant's effluent.

Bromomethane, Copper, Hexavalent Chromium (dissolved), Lead, and Zinc
The Ohio EPA risk assessment (Table 12) places these parameters in group 3. This placement, as well as the data in Table 3, Table 4, and Table 5, support that these parameters do not have the reasonable potential to contribute to WQS exceedances, and limits are not necessary to protect water quality. No new monitoring is proposed. Monitoring at a reduced frequency for copper, hexavalent chromium (dissolved), and lead is proposed to document that these pollutants continue to remain at low levels. Limits for zinc are proposed to be removed but monitoring will continue at a reduced frequency.

Arsenic, Bromodichloromethane, Bromoform, Chloroform, Chromium, Dibromochloromethane, Iron, Methylene Chloride, Molybdenum, Nickel, Nitrate+Nitrite, Strontium, and Toluene
The Ohio EPA risk assessment (Table 12) places these parameters in group 2. This placement, as well as the data in Table 3, Table 4, and Table 5, support that these parameters do not have the reasonable potential to contribute to WQS exceedances, and limits are not necessary to protect water quality. No new monitoring is proposed. Monitoring for chloroform is proposed to be removed. Monitoring at a reduced frequency for chromium and nickel is proposed to be continued to document that these pollutants continue to remain at low levels. Monitoring for nitrate+nitrate is proposed to continue in order to maintain a nutrient data set for use in the future TMDL study.

Phosphorus and Total Kjeldahl Nitrogen
The *2014 Ohio Integrated Water Quality Monitoring and Assessment Report* (Ohio EPA) lists the Mahoning River watershed as impaired for aquatic life. Nutrients and organic enrichment/dissolved oxygen are listed as causes, and major municipal point sources and CSOs are listed as potential sources. Considering this information, monitoring is proposed to continue. The purpose of the monitoring is to maintain a nutrient data set for use in the future TMDL study.

Whole Effluent Toxicity Reasonable Potential
Based on evaluating the WET data presented in Table 6 and other pertinent data under the provisions of OAC 3745-33-07(B), the Youngstown WWTP is placed in Category 4 with respect to WET. While this indicates that the plant's effluent does not currently pose a toxicity problem, annual toxicity testing is proposed consistent with the minimum monitoring requirements at OAC 3754-33-07(B)(11). Annual chronic toxicity monitoring with the determination of acute endpoints is proposed for the life of the permit. The proposed monitoring will adequately characterize toxicity in the plant's effluent.

Additional Monitoring Requirements
Three new internal bypass stations are proposed to be added. Bypass station 602 will monitor the flow that bypasses the headworks and combines after disinfection. Bypass station 603 will monitor the flow that bypasses secondary treatment and combines at the chlorine contact tanks. Bypass station 604 will monitor the flow that bypasses the trickling filters and combines before the microscreens and activated sludge aeration tank split.

New monitoring is proposed for the 38 Combined Sewer Overflow (CSO) stations listed in Part II, Item E of the permit, which are required to be inspected in accordance with Exhibit B of the March 5, 2002 Consent Decree in Civil Action No. 4:98CV2438. Overflow occurrence and estimated volume must be reported each year for the 38 CSO stations.

Fecal coliform monitoring at upstream monitoring station 801 and downstream monitoring station 901 is proposed to be removed and replaced with *E. coli* monitoring.

Free cyanide monitoring will continue with the new methods (see Part II of the permit).

Additional monitoring requirements proposed at the final effluent, influent and upstream/downstream stations are included for all facilities in Ohio and vary according to the type and size of the discharge. In addition to permit compliance, this data is used to assist in the evaluation of effluent quality and treatment plant performance and for designing plant improvements and conducting future stream studies.

Sludge
Monitoring requirements proposed for the disposal of sewage sludge by incineration are based on 40 CFR Part 503, Subpart E.

Other Requirements

Compliance Schedule
Pretreatment Local Limits Review - A four month compliance schedule is proposed for the City of Youngstown to submit a technical justification for either revising its local industrial user limits or retaining its existing local limits. If revisions to local limits are required, the City of Youngstown must also submit a pretreatment program modification request. Details are in Part I.C of the permit.

Satellite Agreement
Annual progress reports documenting the compliance status of each satellite system including a description of all reported unauthorized bypasses and overflows from the previous year. Details are in Part I.C of the permit.

CSO Model Evaluation
Prior to the permit expiration date, the predictive collection system model must be updated based upon changes within the collection system. Details are in Part I.C of the permit.

CSO Operational Plan Update
No later than 6 months following the effective date of the permit, the CSO Operational Plan must be updated. Details are in Part I.C of the permit.

New Limit(s) - A 36 month compliance schedule (due July 1, 2018) is proposed for the Youngstown WWTP to meet the new limits for cadmium, silver, and free cyanide. Details are in Part I.C of the permit.

LTCP – The schedule must be implemented in the December 5, 2014 CSO LTCP for the WWTP improvements and wet weather facility. The Preliminary Design Report must be submitted for the existing disinfection system with a recommendation for an interim resolution. Details are in Part I.C of the permit.

Sanitary Sewer Overflow Reporting
Provisions for reporting SSOs are again proposed in this permit. These provisions include: the reporting of the system-wide number of SSO occurrences on monthly operating reports; telephone notification of Ohio EPA and the local health department, and 5-day follow up written reports for certain high risk SSOs; and preparation of an annual report that is submitted to Ohio EPA and made available to the public. Many of these provisions were already required under the "Noncompliance Notification", "Records Retention", and "Facility Operation and Quality Control" general conditions in Part III of Ohio NPDES permits.

Combined Sewer Overflow Inspection & Annual Report
Provisions for inspecting the CSOs listed in Exhibit B of the Consent Decree are again proposed in this permit. New annual reporting for all 101 CSO stations is required to summarize CSO dischargers and CSO control activities during the previous year. Inspections are already conducted by the City and will now be compiled in an annual report that is submitted to Ohio EPA and made available to the public. Details on the reporting and inspections requirements are in Part II, Item E.of the permit.

Operator Certification and Operator of Record
Operator certification requirements have been included in Part II of the permit in accordance with rules adopted in December 2006 (OAC 3745-7-02). These rules require the Youngstown WWTP to have a Class IV wastewater treatment plant operator in charge of the sewage treatment plant operations discharging through outfall 001. These rules also require the permittee to designate one or more operator of record to oversee the technical operation of the sewerage system.

Low-Level Free Cyanide Testing
Currently there are two approved methods for free cyanide listed in 40 CFR 136.3 that have quantification levels lower than any water quality-based effluent limits:

- ASTM D7237-10 and OIA-1677-09 - Flow injection followed by gas diffusion amperometry

These methods will allow Ohio EPA make more reliable water quality-related decisions regarding free cyanide. Because the quantification levels are lower than any water quality-based effluent limits, it will also be possible to directly evaluate compliance with free cyanide limits.

New NPDES permits no longer authorize the use of method 4500 CN-I from Standard Methods for free cyanide testing. The new permits require permittees to begin using one of these approved methods as soon as possible. If a permittee must use method 4500 CN-I during the transition to an approved method, they are instructed to report the results on their DMR and enter "Method 4500 CN-I" in the remarks section.

Storm Water Compliance
To comply with industrial storm water regulations, the permittee requested coverage under the industrial storm water general permit. Permit 3GR00928*EG became effective on 3/10/12. No later than the 3/10/17, the permittee must request renewed coverage under the industrial storm water general permit or make other provisions to comply with the industrial storm water regulations.

Outfall Signage
Part II of the permit includes requirements for the permittee to place and maintain a sign at each outfall to the Mahoning River providing information about the discharge. Signage at outfalls is required pursuant to OAC 3745-33-08(A).

Figure 1. Location of Youngstown Wastewater Treatment Plant

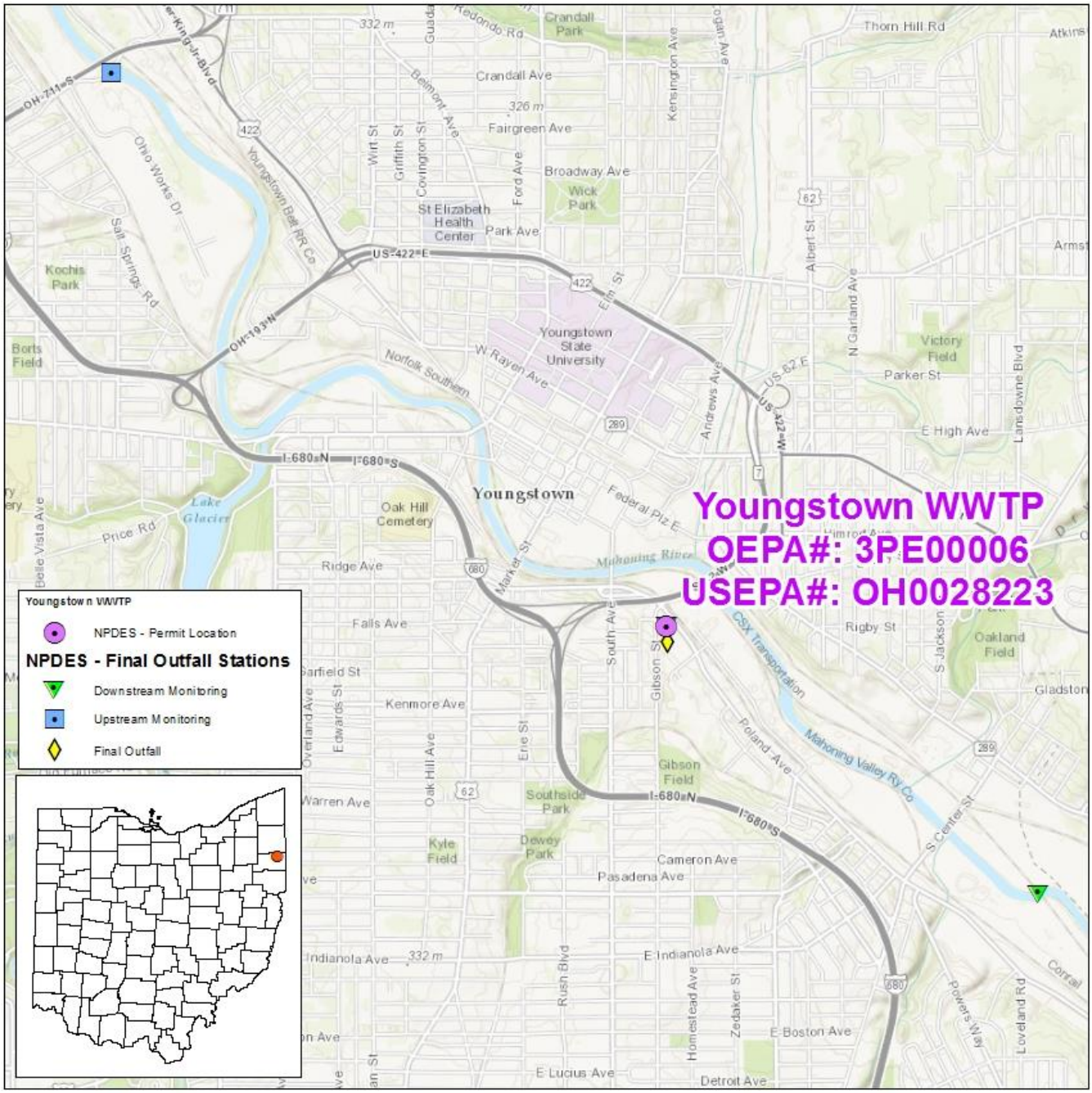

Icons for downstream stations 902 and 903 are obscured by the icon for the facility.

Figure 2. Diagram of Wastewater Treatment System

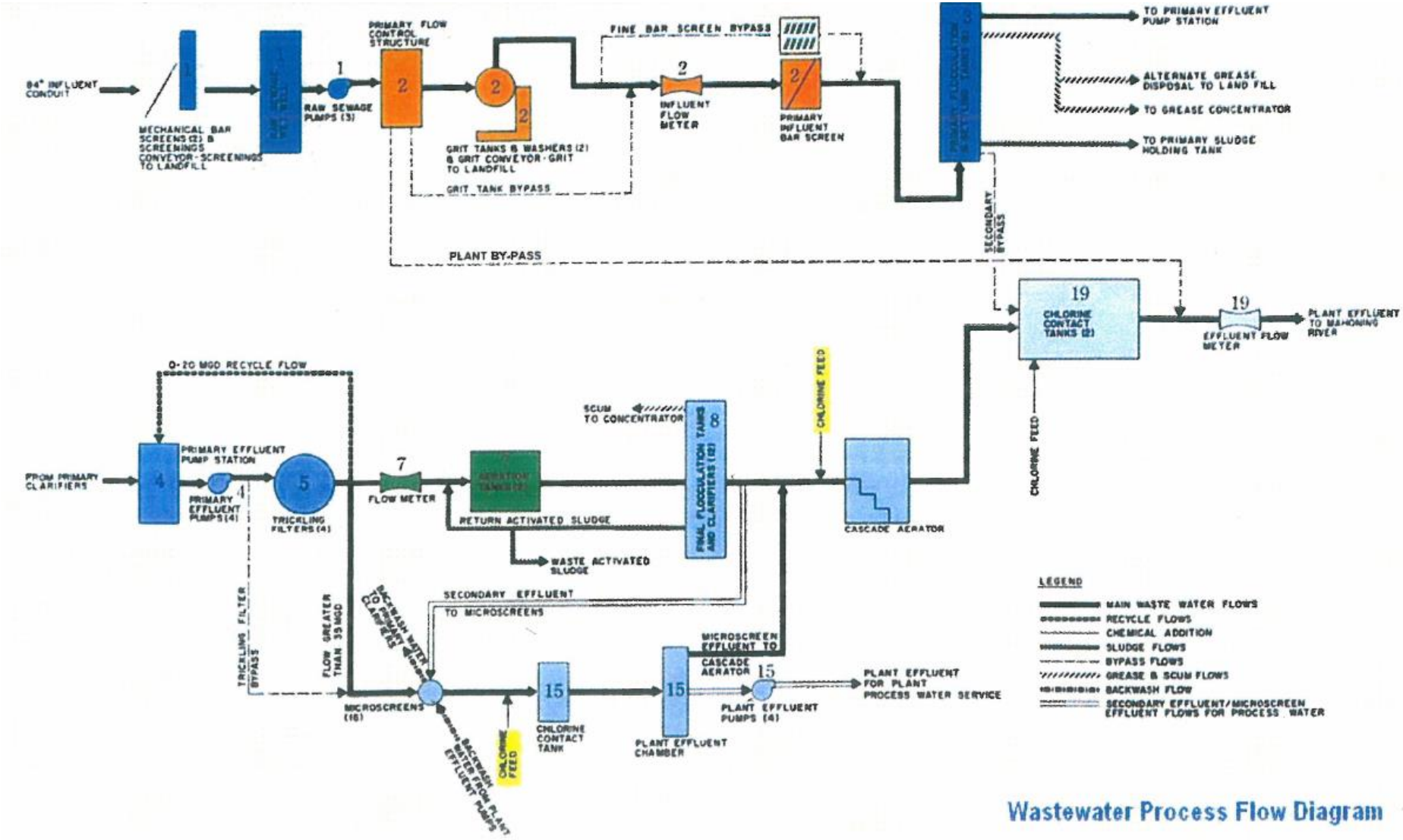

Figure 3. Mahoning River Study Area

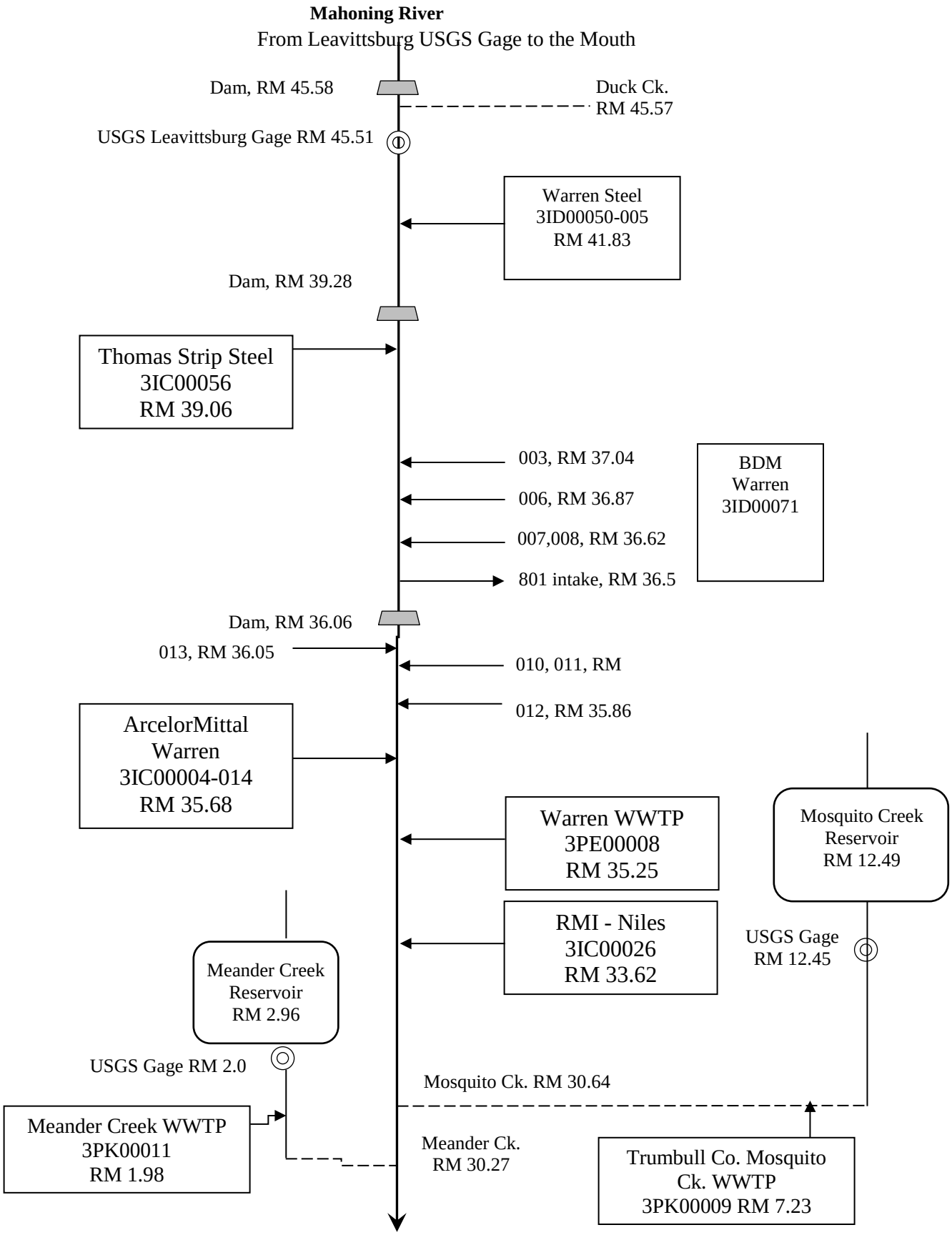

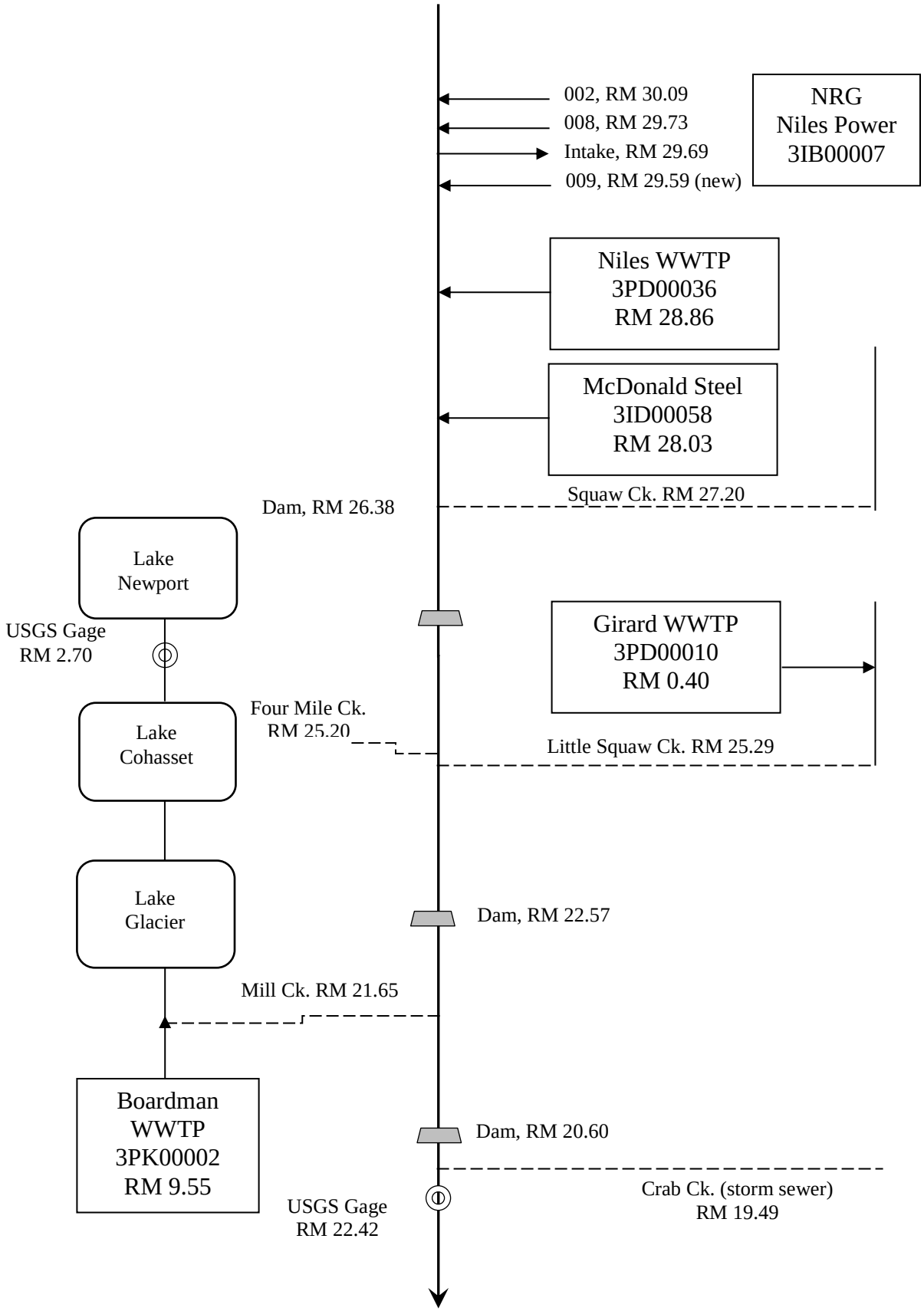
002, RM 30.09
008, RM 29.73
Intake, RM 29.69
009, RM 29.59 (new)
NRG
Niles Power
3IB00007
Niles WWTP
3PD00036
RM 28.86
McDonald Steel
3ID00058
RM 28.03
Squaw Ck. RM 27.20
Dam, RM 26.38
Lake
Newport
USGS Gage
RM 2.70
Girard WWTP
3PD00010
RM 0.40
Four Mile Ck.
RM 25.20
Little Squaw Ck. RM 25.29
Lake
Cohasset
Lake
Glacier
Dam, RM 22.57
Mill Ck. RM 21.65
Boardman
WWTP
3PK00002
RM 9.55
Dam, RM 20.60
Crab Ck. (storm sewer)
RM 19.49
USGS Gage
RM 22.42

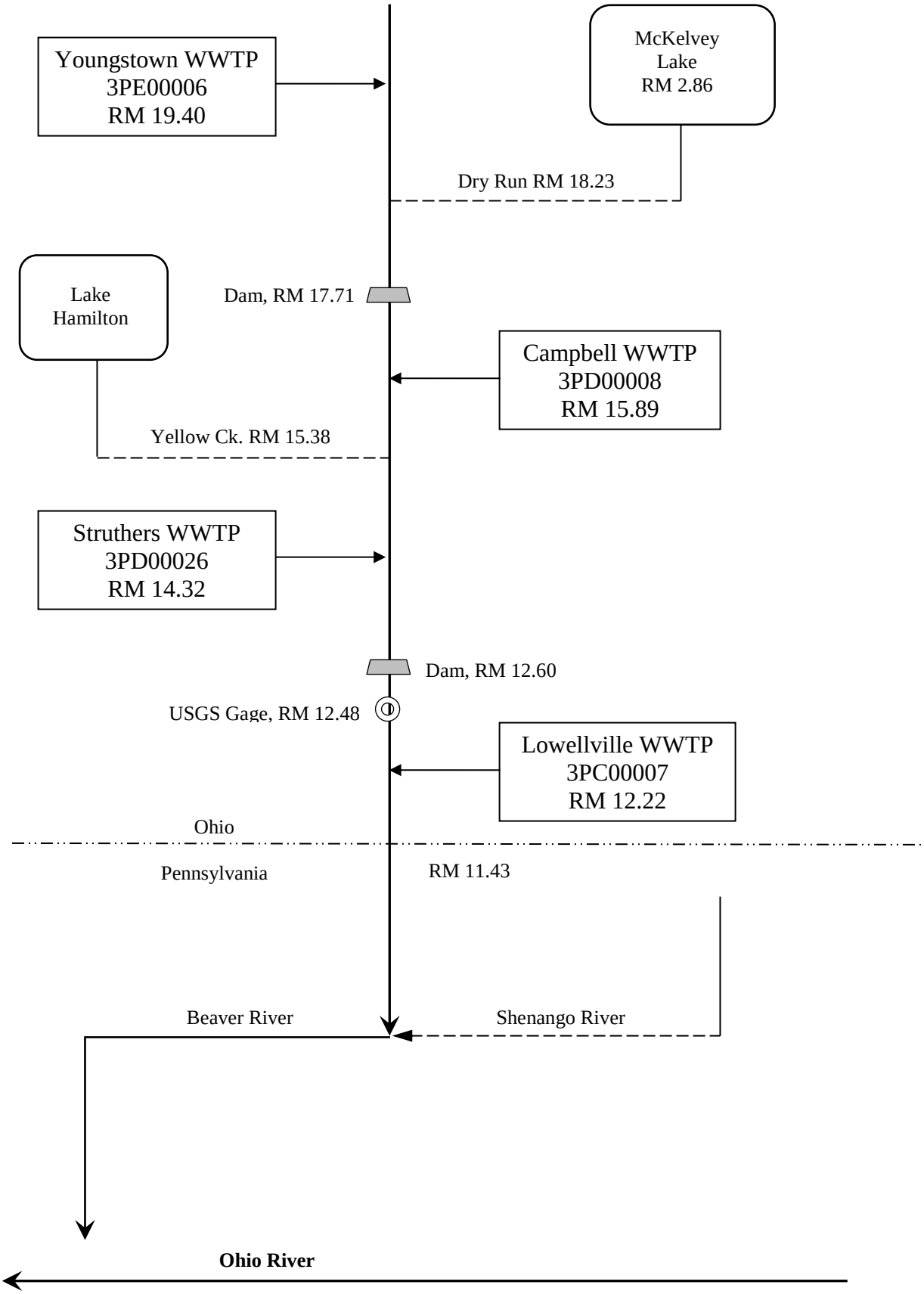
Youngstown WWTP
3PE00006
RM 19.40
McKelvey
Lake
RM 2.86
Dry Run RM 18.23
Lake
Hamilton
Dam, RM 17.71
Campbell WWTP
3PD00008
RM 15.89
Yellow Ck. RM 15.38
Struthers WWTP
3PD00026
RM 14.32
Dam, RM 12.60
USGS Gage, RM 12.48
Lowellville WWTP
3PC00007
RM 12.22
Ohio
Pennsylvania
RM 11.43
Beaver River
Shenango River
Ohio River

Table 1. Effluent Violations for Outfall 001

Year	**2006**		**2007**		**2008**		**2009**		**2010**		**2011**	
Parameter	***30 day***	***Daily***	***30 day***	***Daily***	***30 day***	***Daily***	***30 day***	***Daily***	***30 day***	***Daily***	***30 day***	***Daily***
Chlorine, Total Residual	--	5	--	7	--	12	--	4	--	9	--	6
Dissolved Oxygen (minimum)	--	0	--	0	--	0	--	0	--	1	--	0
Fecal Coliform[A]	2	5	0	0	0	0	0	0	0	0	0	0
Mercury												
Concentration	1	0	0	0	2	0	1	0	0	0	3	0
Loading	1	0	0	0	3	0	1	0	0	0	2	0
Oil & Grease	--	2	--	0	--	0	--	0	--	2	--	0
pH (Minimum)	--	1	--	3	--	1	--	1	--	0	--	1
Total Suspended Solids[A]												
Concentration	0	1	0	0	0	1	0	1	4	8	0	0
Loading	0	1	0	0	2	2	1	1	2	7	2	3
Zinc												
Concentration	--	1	--	0	--	0	--	0	--	2	--	2
Loading	--	1	--	0	--	0	--	1	--	1	--	2
Total	4	17	0	10	7	16	3	8	6	30	7	14

A = weekly average

Table 2. Average Annual Effluent Flow Rates

Year	Annual Flow in MGD		
	50th Percentile	95th Percentile	Maximum
2006	33.7	57.2	68.7
2007	31.8	61.5	86.4
2008	33.1	65.4	98.3
2009	29.9	53.5	79.0
2010	28.7	50.1	75.2
2011	32.0	68.9	86.7

MGD = million gallons per day

Table 3. Effluent Characterization Using Pretreatment Data and Ohio EPA Data

Summary of analytical results for Youngstown outfall 3PE00006001. Units µg/L unless otherwise noted; NA = not analyzed; ND = not detected (detection limit).

	Ohio EPA		Pretreatment				
Parameter	**9/21/2010**	**5/18/2010**	**6/8/2011**	**6/9/2010**	**6/17/2009**	**6/19/2008**	**6/13/2007**
Arsenic	2.6	ND (2.0)	ND (25)	ND (25)	ND (25)	ND (25)	ND (25)
Barium	17	69	NA	NA	NA	NA	NA
Bis(2-ethylhexyl)phthalate	ND (10.4)	ND (10.4)	20.6	ND (10)	11	ND (10)	11.9
Bromodichloromethane	1.35	1.2	ND (5)	ND (5)	ND (5)	ND (5)	6.98
Bromoform	1.21	ND (0.50)	ND (5)	ND (5)	ND (5)	ND (5)	6.99
Bromomethane	10.7	ND (0.50)	ND (10)	ND (10)	ND (10)	ND (10)	ND (10)
Chloride (mg/L)	188	157	NA	NA	NA	NA	NA
Chloroform	ND (0.5)	1.94	ND (5)	ND (5)	10.6	6.74	ND (5)
Copper	12.4	7.7	ND (10)	10.8	ND (10)	ND (10)	ND (10)
Dibromochloromethane	2.57	0.69	ND (5)	ND (5)	ND (5)	5.45	12.1
Iron	429	416	NA	NA	NA	NA	NA
Lead	ND (2.0)	2.1	ND (15)	ND (15)	ND (15)	ND (15)	ND (15)
Methylene chloride	ND (0.5)	ND (0.5)	ND (5)	ND (5)	14.6	ND (5)	ND (5)
Nickel	6.2	5	ND (10)	ND (10)	ND (10)	ND (10)	19.3
Nitrite+Nitrate (mg/L)	12.3	7.53	NA	NA	NA	NA	NA
Phosphorus (mg/L)	2.34	1.62	NA	NA	NA	NA	NA
Selenium	4.3	ND (2.0)	ND (25)	ND (25)	ND (25)	ND (25)	ND (25)
Strontium	546	325	NA	NA	NA	NA	NA
Toluene	ND (0.5)	1.23	ND (5)	ND (5)	ND (5)	ND (5)	ND (5)
Total Filterable Residue (mg/L)	680	550	NA	NA	NA	NA	NA
Zinc	104	68	51.8	57.1	38.7	43.1	49.3

Table 4. Effluent Characterization Using Self-Monitoring Data

Parameter	Season	Units	Current Permit Limits		#	Percentiles		Data
			30 day	Daily	Obs.	50th	95th	Range
Outfall 001								
Water Temperature	Annual	°C	- - - - - Monitor - - - - -		2094	17.2	22.3	1.9-25.6
Dissolved Oxygen	Annual	mg/L	5.0 Minimum		2061	10.2	12.1	3.7-13
Total Suspended Solids	Summer	mg/L	20	30	743	5.8	33.1	0-348
		kg/day	2653	3980	--	--	--	--
	Winter	mg/L	30	45	700	6.3	25.2	0-422
		kg/day	3980	5969	--	--	--	--
Oil and Grease	Annual	mg/L	10 Maximum		277	2.6	8.82	0-30.9
Ammonia	Summer	mg/L	3.0	4.5	743	0.22	1.06	0-7.4
		kg/day	398	597	--	--	--	--
	Winter	mg/L	15	22	700	0.285	0.801	0-4.24
		kg/day	1990	2915	--	--	--	--
Total Kjeldahl Nitrogen	Annual	mg/L	- - - - - Monitor - - - - -		289	1.26	3.48	0-12.9
Nitrite + Nitrate	Annual	mg/L	- - - - - Monitor - - - - -		300	7.97	13.4	1.13-22.4
Phosphorus	Annual	mg/L	- - - - - Monitor - - - - -		597	0.41	2	0-9.72
Cyanide, Free	Annual	mg/L	- - - - - Monitor - - - - -		69	0	0	0-0.023
Nickel	Annual	µg/L	- - - - - Monitor - - - - -		162	6.16	32.2	0-205
Silver	Annual	µg/L	- - - - - Monitor - - - - -		162	0	6.33	0-119
Zinc	Annual	µg/L	--	180	162	43.7	123	4.39-478
		kg/day	--	23.8	--	--	--	--
Cadmium	Annual	µg/L	- - - - - Monitor - - - - -		162	0	0.906	0-53.4
Lead	Annual	µg/L	- - - - - Monitor - - - - -		162	0	15.5	0-547
Chromium	Annual	µg/L	- - - - - Monitor - - - - -		162	1.49	19	0-897
Copper	Annual	µg/L	- - - - - Monitor - - - - -		162	6.78	17.6	0-76
Hexavalent Chromium (Dissolved)	Annual	µg/L	- - - - - Monitor - - - - -		70	0	6.58	0-10
Fecal Coliform	Summer	#/100 mL	1000	2000	735	27	2420	1-44000
Chloroform	Annual	µg/L	- - - - - Monitor - - - - -		23	0	6.39	0-11.6
Flow Rate	Annual	MGD	- - - - - Monitor - - - - -		2098	31.7	61.5	3.6-98.3
Chlorine, Total Residual	Summer	mg/L	--	0.024	743	0	0.06	0-0.45
Mercury	Annual	ng/L	12	1800	69	6.2	17.7	0-139
		kg/day	0.002	0.23	--	--	--	--
Acute Toxicity								
Ceriodaphnia dubia	Annual	TU_a	- - - - - Monitor - - - - -		7	0	0	0-0
Pimephales promelas	Annual	TU_a	- - - - - Monitor - - - - -		7	0	0	0-0

Table 4. Effluent Characterization Using Self-Monitoring Data

Parameter	Season	Units	Current Permit Limits		#	Percentiles		Data
			30 day	Daily	Obs.	50th	95th	Range
Chronic Toxicity								
Ceriodaphnia dubia	Annual	TU_c	- - - - - Monitor - - - - -		7	0	0.98	0-1.4
Pimephales promelas	Annual	TU_c	- - - - - Monitor - - - - -		7	0	0	0-0
pH, Maximum	Annual	S.U.	--	9.0	2086	7.6	8	4.6-8.4
pH, Minimum	Annual	S.U.	--	6.5	2085	7.4	7.8	5.8-8.3
Carbonaceous Biochemical Oxygen Demand (5 day)	Summer	mg/L	12	17	732	2	8	0-45
		kg/day	1590	2255	--	--	--	--
	Winter	mg/L	25	40	698	4	9	0-26
		kg/day	3316	5306	--	--	--	--
Sludge Monitoring Station 585								
Arsenic	Annual	mg/kg	- - - - - Monitor - - - - -		99	10.7	31.6	0-258
Beryllium	Annual	mg/kg	- - - - - Monitor - - - - -		99	0	10.5	0-3360
Cadmium	Annual	mg/kg	- - - - - Monitor - - - - -		99	2.27	10.8	0-211
Chromium	Annual	mg/kg	- - - - - Monitor - - - - -		99	42	118	0-5730
Lead	Annual	mg/kg	- - - - - Monitor - - - - -		99	77.8	186	0-684
Nickel	Annual	mg/kg	- - - - - Monitor - - - - -		99	42.3	126	0-408
Sludge Weight	Annual	Dry Tons	- - - - - Monitor - - - - -		1262	16.6	28.5	0.15-203
Mercury	Annual	mg/kg	- - - - - Monitor - - - - -		98	1.27	6.32	0-11
Internal Monitoring Station 601								
Total Suspended Solids	Annual	mg/L	- - - - - Monitor - - - - -		1422	126	268	4.75-1430
Cyanide, Free	Annual	mg/L	- - - - - Monitor - - - - -		68	0	0	0-86.1
Nickel	Annual	µg/L	- - - - - Monitor - - - - -		70	10.7	40.3	0-102
Silver	Annual	µg/L	- - - - - Monitor - - - - -		70	0	13.9	0-85
Zinc	Annual	µg/L	- - - - - Monitor - - - - -		70	120	282	36.6-646
Cadmium	Annual	µg/L	- - - - - Monitor - - - - -		70	0	6.62	0-44.7
Lead	Annual	µg/L	- - - - - Monitor - - - - -		70	7.57	28.9	0-794
Chromium	Annual	µg/L	- - - - - Monitor - - - - -		70	5.25	19.8	0-38.3
Copper	Annual	µg/L	- - - - - Monitor - - - - -		70	30.4	90.1	0-140
Hexavalent Chromium (Dissolved)	Annual	µg/L	- - - - - Monitor - - - - -		69	0	6.83	0-10.2
Mercury	Annual	ng/L	- - - - - Monitor - - - - -		69	21.8	52.9	8.9-82.9
pH, Maximum	Annual	S.U.	- - - - - Monitor - - - - -		2057	7.7	9	0-11.2
pH, Minimum	Annual	S.U.	- - - - - Monitor - - - - -		2056	7	7.5	2.4-8
Carbonaceous Biochemical Oxygen Demand (5 day)	Annual	mg/L	- - - - - Monitor - - - - -		1403	79	155	0-315

Table 4. Effluent Characterization Using Self-Monitoring Data

Parameter	Season	Units	Current Permit Limits		#	Percentiles		Data
			30 day	Daily	Obs.	50th	95th	Range
Upstream Monitoring Station 801								
Water Temperature	Annual	°C	- - - - - Monitor - - - - -		69	15.3	26.8	4-28.9
Dissolved Oxygen	Annual	mg/L	- - - - - Monitor - - - - -		69	8.8	13.8	5.2-14.7
pH	Annual	S.U.	- - - - - Monitor - - - - -		69	7.65	7.94	6.73-8.1
Ammonia	Annual	mg/L	- - - - - Monitor - - - - -		69	0.3	0.562	0.13-3.08
Nitrite + Nitrate	Annual	mg/L	- - - - - Monitor - - - - -		69	1	1.81	0-2.3
Phosphorus	Annual	mg/L	- - - - - Monitor - - - - -		69	0.138	0.826	0-2.33
Fecal Coliform	Annual	#/100 mL	- - - - - Monitor - - - - -		33	113	1410	10.3-5200
Acute Toxicity								
Ceriodaphnia dubia	Annual	% Affected	- - - - - Monitor - - - - -		6	0	0	0-0
Pimephales promelas	Annual	% Affected	- - - - - Monitor - - - - -		6	6.5	16	2-18
Chronic Toxicity								
Ceriodaphnia dubia	Annual	% Affected	- - - - - Monitor - - - - -		6	0	7.5	0-10
Pimephales promelas	Annual	% Affected	- - - - - Monitor - - - - -		6	18	21	5-22
Downstream Monitoring Station 901								
Water Temperature	Annual	°C	- - - - - Monitor - - - - -		69	15.1	26.2	4.1-27.8
Dissolved Oxygen	Annual	mg/L	- - - - - Monitor - - - - -		69	9.1	14	5.6-14.6
pH	Annual	S.U.	- - - - - Monitor - - - - -		69	7.71	8	7-8.1
Ammonia	Annual	mg/L	- - - - - Monitor - - - - -		69	0.26	0.55	0.16-0.91
Nitrite + Nitrate	Annual	mg/L	- - - - - Monitor - - - - -		69	1.35	2.26	0-2.4
Phosphorus	Annual	mg/L	- - - - - Monitor - - - - -		69	0.151	0.439	0-1.2
Cyanide, Free	Annual	mg/L	- - - - - Monitor - - - - -		69	0	0	0-0.128
Hardness	Annual	mg/L	- - - - - Monitor - - - - -		69	147	192	50.1-224
Nickel	Annual	µg/L	- - - - - Monitor - - - - -		69	5.2	15.2	0-20.4
Silver	Annual	µg/L	- - - - - Monitor - - - - -		69	0	9.56	0-163
Zinc	Annual	µg/L	- - - - - Monitor - - - - -		69	25.7	57.7	11.3-113
Cadmium	Annual	µg/L	- - - - - Monitor - - - - -		69	3.68	9.12	0-52.4
Lead	Annual	µg/L	- - - - - Monitor - - - - -		69	4.1	21.7	0-234
Chromium	Annual	µg/L	- - - - - Monitor - - - - -		69	2.13	13.3	0-29.9
Copper	Annual	µg/L	- - - - - Monitor - - - - -		69	6.6	20.3	0-970
Hexavalent Chromium (Dissolved)	Annual	µg/L	- - - - - Monitor - - - - -		69	0	7.18	0-11.3
Fecal Coliform	Annual	#/100 mL	- - - - - Monitor - - - - -		33	224	2540	35.8-12700

Table 4. Effluent Characterization Using Self-Monitoring Data

Parameter	Season	Units	Current Permit Limits		# Obs.	Percentiles		Data Range
			30 day	Daily		50th	95th	
Downstream Monitoring Station 902								
Acute Toxicity								
Ceriodaphnia dubia	Annual	% Affected	- - - - - Monitor - - - - -		6	0	0	0-0
Pimephales promelas	Annual	% Affected	- - - - - Monitor - - - - -		6	3.5	16	0-18
Downstream Monitoring Station 903								
Chronic Toxicity								
Ceriodaphnia dubia	Annual	% Affected	- - - - - Monitor - - - - -		6	0	15	0-20
Pimephales promelas	Annual	% Affected	- - - - - Monitor - - - - -		6	10	22.5	2-25

All values are based on annual records unless otherwise indicated. * = For minimum pH, 5th percentile shown in place of 50th percentile; ** = For dissolved oxygen, 5th percentile shown in place of 95th percentile; a = weekly average."

Table 5. Projected Effluent Quality

Parameter	Units	# of Samples	# > MDL	Average PEQ	Maximum PEQ
Self-Monitoring (DMR) Data					
Ammonia (Summer)	mg/L	511	490	0.462	0.997
Ammonia (Winter)	mg/L	341	328	0.427	0.853
Nitrite+Nitrate[B]	mg/L	302	302	12.3	16.9
Phosphorus[B]	mg/L	599	548	1.21	2.19
Cyanide, free	µg/L	67	2	16.8	23.0
Nickel[B]	µg/L	168	135	18.2	27.5
Silver	µg/L	159	42	7.36	7.98
Zinc[B]	µg/L	169	169	87	125
Cadmium	µg/L	160	22	10.1	13.9
Lead[B]	µg/L	166	51	12.3	15.8
Chromium	µg/L	160	96	9.33	12.8
Copper[B]	µg/L	169	143	14.9	22.1
Hexavalent Chromium (dissolved)	µg/L	70	22	5.28	8.32
Chloroform[B]	µg/L	30	5	10.2	13.9
Chlorine, Total Residual	µg/L	743	96	197	270
Mercury	ng/L	68	67	15.5	24.2
Ohio EPA and Pretreatment Data					
Arsenic	µg/L	7	1	7.21	9.88
Barium	µg/L	2	2	191	262
Chloride	mg/L	2	2	522	714
Total Filterable Residue	mg/L	2	2	1886	2584
Iron	µg/L	2	2	1190	1630
Selenium	µg/L	7	1	11.9	16.3
Strontium	µg/L	2	2	1515	2075
Bis(2-ethylhexyl)phthalate[A]	µg/L	7	3	30.1	41.2
Bromodichloromethane[A]	µg/L	7	3	10.2	14.0
Bromoform[A]	µg/L	7	2	10.2	14.0
Bromomethane	µg/L	7	1	15.6	21.4
Dibromochloromethane	µg/L	7	4	17.7	24.2
Methylene chloride[A]	µg/L	7	1	21.3	29.2
Toluene	µg/L	7	1	3.41	4.67

A = carcinogen
B = Ohio EPA and Pretreatment data were combined with the DMR data
DMR = Discharge monitoring report
MDL = analytical method detection limit
PEQ = projected effluent quality

Table 6. Summary of Acute and Chronic Whole Effluent Toxicity Results

Date	*Ceriodaphnia Dubia*		*Pimephales promelas*	
	TU_a	**TU_c**	**TU_a**	**TU_c**
9/5/2006	AA	1.4	AA	AA
9/11/2007	AA	AA	AE	AE
10/2/2007	NT	NT	AA	AA
9/7/2008	AA	AA	AA	AA
10/7/2008	AA	AA	AA	AA
9/15/2009	AA	AA	AA	AA
9/14/2010	AA	AA	AA	AA
9/13/2011	AA	AA	AA	AA

AA = non-detection; analytical method detection limit of 0.2 TU_a, 1.0 TU_c
AE = test out of control; re-done 10/2/07
NT = not tested
TU_a = acute toxicity unit
TU_c = chronic toxicity unit

Table 7. Water Quality Criteria for Monte Carlo Model Parameters

Parameter (µg/L)	Outside Mixing Zone Criteria				Inside Mixing Zone Maximum[C]
	Average			Maximum Aquatic Life[B]	
	Human Health	Agri-culture[A]	Aquatic Life[B]		
Cadmium	-	50	0.4 [E]	8.4	19
Chromium, total	-	100	130	2800	6100
Copper	1300	500	16.[D]	25.[D]	51
Lead	-	100	5.9[D,E]	250.[D]	550
Nickel	610.[E]	200	83	750	1600
Zinc	69000	25000	190	190	410

A = There is some uncertainty regarding the return period used to develop the Agricultural Water Supply (AWS) criteria. Therefore, the AWS criteria for the Monte Carlo model are presented for information purposes only.
B= Based on river hardness of 172 mg/L.
C = Based on effluent hardness of 189 mg/L.
D = Effective Criteria Based on Application of Dissolved Metal Translator.
E = Pennsylvania water quality criteria at the state line.

Table 8. Monte Carlo Model Inputs

Parameter	Mean	Coefficient of Variation Acute	Coefficient of Variation Chronic	Source
Mahoning River at Leavittsburg				
Flow (MGD)[A]	--	--	--	USGS
Cadmium (µg/L)	0	0	0	STORET
Chromium, total (µg/L)	0	0	0	STORET
Copper (µg/L)	2.1	0.31	0.12	STORET
Lead (µg/L)	0	0	0	STORET
Nickel (µg/L)	2.8	0.18	0.07	STORET
Zinc (µg/L)	0	0	0	STORET
Mosquito Creek at mouth				
Flow (MGD)	80.9	1.44	0.54	USGS/SWIMS
Cadmium (µg/L)	0.25	2.7	1	STORET
Chromium, total (µg/L)	0	0	0	STORET
Copper (µg/L)	2.4	0.7	0.27	STORET
Lead (µg/L)	0	0	0	STORET
Nickel (µg/L)	0.94	0.65	0.25	STORET
Zinc (µg/L)	11.3	1.3	0.47	STORET
Meander Creek at mouth				
Flow (MGD)	3.61	0.3	0.11	SWIMS
Cadmium (µg/L)	0	0	0	STORET
Chromium, total (µg/L)	1.3	0.97	0.37	STORET
Copper (µg/L)	6	0.92	0.35	STORET
Lead (µg/L)	0	0	0	STORET
Nickel (µg/L)	8.1	1.4	0.53	STORET
Zinc (µg/L)	40	1.3	0.48	STORET
Little Squaw Creek at mouth				
Flow (MGD)	3.6	0.44	0.17	SWIMS
Cadmium (µg/L)	0.15	2.7	1	SWIMS
Chromium, total (µg/L)	3.2	0.35	0.13	SWIMS
Copper (µg/L)	12	0.6	0.23	SWIMS
Lead (µg/L)	0	0	0	SWIMS
Nickel (µg/L)	9.8	0.87	0.33	SWIMS
Zinc (µg/L)	64	0.8	0.3	SWIMS
Mill Creek at mouth				

Table 8. Monte Carlo Model Inputs

Parameter	Mean	Coefficient of Variation Acute	Coefficient of Variation Chronic	Source
Flow (MGD)	44.5	2.2	0.84	USGS
Cadmium (µg/L)	0.12	0.48	0.18	STORET
Chromium, total (µg/L)	0	0	0	STORET
Copper (µg/L)	2.4	0.7	0.26	STORET
Lead (µg/L)	4.1	1.9	0.74	STORET
Nickel (µg/L)	28.1	0.3	0.11	STORET
Zinc (µg/L)	13.5	1.87	0.71	STORET
Discharger flows (MGD)				
Warren Steel Holdings (CSC)	0.76	0.94	0.35	SWIMS
Thomas Steel Strip	0.62	0.45	0.17	SWIMS
BDM Warren (RG Steel)				
Outfall 003	0.086	0.98	0.37	SWIMS
Outfall 006	0.013	1.56	0.59	SWIMS
Outfall 007	2.48C	0.3	0.11	SWIMS
Outfall 008	6.91	0.17	0.07	SWIMS
Intake[B]	--.--	--.--	--.--	---
Outfall 013	34.3	0.11	0.04	SWIMS
Outfall 010	0.24	0.72	0.27	SWIMS
Outfall 011	1.47	0.6	0.23	SWIMS
Outfall 012	0.14	0.47	0.18	SWIMS
ArcelorMittal				
Outfall 014	2.58	0.44	0.17	SWIMS
Warren WWTP	14.9	0.49	0.19	SWIMS
RMI - Niles	0.35	0.51	0.19	SWIMS
NRG Niles (GenOn Power)				
Outfall 002	2.7	0.43	0.16	SWIMS
Outfall 008	0.001	0	0	SWIMS
Outfall 009	1	0	0	
Niles WWTP	4.99	0.52	0.2	SWIMS
McDonald Steel	0.91	0.97	0.37	SWIMS
Youngstown WWTP	34.6	0.39	0.15	SWIMS
Campbell WWTP	2.1	0.55	0.21	SWIMS
Struthers WWTP	4.7	0.31	0.12	SWIMS
Lowellville WWTP	0.43	0.72	0.27	SWIMS

A = Each iteration of the model sequentially selects an upstream flow from the historical flow record at this gage.
B = Intake flow was set equal to the sum of the BDM Warren effluent flows plus the Mittal flow, multiplied by 0.871. (12.9% of the BDM Warren / Mittal flow comes from sources other than the intake.)

C = Long-term average value reported on the application.
STORET = United States Environmental Protection Agency Storage and Retrieval Data Warehouse
SWIMS = Ohio Environmental Protection Agency Surface Water Information Management System
USGS = United States Geological Survey
WWTP = wastewater treatment plant

Table 9. Water Quality Criteria in the Study Area

Parameter	Units	Outside Mixing Zone Criteria				Inside Mixing Zone Maximum
		Average			Maximum	
		Human Health	Agri-culture	Aquatic Life	Aquatic Life	
Ammonia-Summer	mg/L	--	--	1.3	--	--
Ammonia-Winter	mg/L	--	--	4	--	--
Antimony	µg/L	4300	--	190	900	1800
Arsenic	µg/L	--	100	150	340	680
Barium	µg/L	--	--	220	2000	4000
Beryllium[H]	µg/L	280	100	25	220	480
Bis(2-ethylhexyl)phthalate	µg/L	59	--	8.4	1100	2100
Boron	µg/L	--	--	3900	33000	65000
Bromodichloromethane	µg/L	460	--	--	--	--
Bromoform	µg/L	3600	--	230	1100	2200
Bromomethane	µg/L	4000	--	16	38	75
Chlorine, Total Residual	µg/L	--	--	11	19	38
Chloroform	µg/L	4700	--	140	1300	2600
Chromium^{+6} (dissolved)	µg/L	--	--	10.[C]	16	31
Cobalt	µg/L	--	--	24	220	440
Cyanide, Free	µg/L	220000	--	12	46	92
Dibromochloromethane	µg/L	340	--	--	--	--
Fluoride	µg/L	--	2000	--	--	--
Iron	µg/L	--	5000	1500.[C]	--	--
Mercury[A]	ng/L	12	10000	910	1700	3400
Methyl Bromide	µg/L	4000	--	16	38	75
Methylene Chloride	µg/L	16000	--	1900	11000	22000
Molybdenum	µg/L	--	--	20000	190000	370000
Naphthalene	µg/L	--	--	21	170	340
Nitrate+Nitrite	mg/L	--	100	--	--	--
Phenol	µg/L	4600000	--	400	4700	9400
Selenium	µg/L	11000	50	4.6[C]	--	--
Silver	µg/L	–	–	1.3	24.[D]	49.[D]
Strontium	µg/L	--	--	21000	40000	81000
Tetrachloroethylene	µg/L	89	--	53	430	850
Thallium	µg/L	6.3	--	17	79	160
Tin	µg/L	--	--	180	1600	3200
Toluene	µg/L	200000	--	62	560	1100
Total Filterable Residue	mg/L	--	--	500.[C]	--	--

Table 9. Water Quality Criteria in the Study Area

Parameter	Units	Outside Mixing Zone Criteria				Inside Mixing Zone Maximum
		Average			Maximum	
		Human Health	Agri-culture	Aquatic Life	Aquatic Life	
Total Filterable Residue	mg/L	--	--	1500	--	--

A = Bioaccumulative Chemical of Concern (BCC)
C = Pennsylvania Drinking Water Supply Quality Criteria.
D = Effective Criteria Based on Application of Dissolved Metal Translator.
H = Aquatic Life Criteria Based on hardness of 169.mg/L; inside mixing zone maximum based on hardness of 180. mg/L.

Table 10. Instream Conditions and Discharger Flows for the CONSWLA Model

Parameter	Units	Outfall	Season	Value	Basis
Mahoning River Upstream					
7Q10	cfs		annual	136	USGS gage #03094000, 1969-2010 data
1Q10	cfs		annual	129	USGS gage #03094000, 1969-2010 data
30Q10	cfs		summer	186	USGS gage #03094000, 1969-2010 data
	cfs		winter	192	USGS gage #03094000, 1969-2010 data
Harmonic Mean Flow	cfs		annual	383	USGS gage #03094000, 1969-2010 data
Meander Creek at mouth					
7Q10	cfs		annual	6.19	USGS gage #03097500, 1929-51 data
1Q10	cfs		annual	6.19	USGS gage #03097500, 1929-51 data
30Q10	cfs		summer	6.19	USGS gage #03097500, 1929-51 data
	cfs		winter	6.19	USGS gage #03097500, 1929-51 data
Harmonic Mean Flow	cfs		annual	6.19	USGS gage #03097500, 1929-51 data
Mosquito Creek at mouth					
7Q10	cfs		annual	10.6	USGS gage #03095500, 1954-91 data
1Q10	cfs		annual	9.47	USGS gage #03095500, 1954-91 data
30Q10	cfs		summer	14	USGS gage #03095500, 1954-91 data
	cfs		winter	12.6	USGS gage #03095500, 1954-91 data
Harmonic Mean Flow	cfs		annual	28	USGS gage #03095500, 1954-91 data
Mill Creek at mouth					
7Q10	cfs		annual	9.99	USGS gage #03098500, 1952-71 data
1Q10	cfs		annual	9.87	USGS gage #03098500, 1952-71 data
30Q10	cfs		summer	10.7	USGS gage #03098500, 1952-71 data
	cfs		winter	15.7	USGS gage #03098500, 1952-71 data
Harmonic Mean Flow	cfs		annual	14.3	USGS gage #03098500, 1952-71 data
Discharger Flow (cfs)					
Warren Steel Holdings		005		2.01	NPDES Application Form 2C
Thomas Steel Strip		001		1.83	NPDES Application Form 2C
BDM Warren (RG Steel)		003		0.34	NPDES Application Form 2C
		006		0.08	NPDES Application Form 2C
		007		3.84	NPDES Application Form 2C

Table 10. Instream Conditions and Discharger Flows for the CONSWLA Model

Parameter	Units	Outfall	Season	Value	Basis
		008		13.4	NPDES Application Form 2C
		010		0.77	NPDES Application Form 2C
		011		4.56	NPDES Application Form 2C
		012		0.38	NPDES Application Form 2C
		013		57.6	NPDES Application Form 2C
ArcelorMittal Warren		014		6.5	NPDES Application Form 2C
Warren WWTP		001		24.8	NPDES Application Form 2A
RMI-Niles		001		0.743	NPDES Application Form 2C
Niles WWTP		001		9.59	NPDES Application Form 2A
McDonald Steel		001		2.82	NPDES Application Form 2C
Mosquito Creek WWTP		001		6.5	NPDES Application Form 2A
Meander Creek WWTP		001		6.19	NPDES Application Form 2A
Boardman WWTP		001		7.74	NPDES Application Form 2A
NRG Niles (GenOn Power)		001		264.6	NPDES Application Form 2C
		002		6.92	NPDES Application Form 2C
		008		0.002	NPDES Application Form 2C
		009		3.09	NPDES Application Form 2C
Girard WWTP		001		7.74	NPDES Application Form 2A
Youngstown WWTP		001		54.2	NPDES Application Form 2A
Campbell WWTP		001		2.94	NPDES Application Form 2A
Struthers WWTP		001		9.28	NPDES Application Form 2A
Lowellville WWTP		001		0.792	NPDES Application Form 2A
Mixing Assumption					
	%		average	100	Stream-to-discharge ratio
	%		maximum	100	Stream-to-discharge ratio
Background Water Quality					
Ammonia					
	mg/L		summer	0.09	STORET[C]: 22 values,4<MDL, 2006-11
	mg/L		winter	0.1	STORET[C]: 12 values,3<MDL, 2006-11
Arsenic	µg/L		annual	2	STORET[C]; 38 values, 17<MDL, 2006-2011
Beryllium	µg/L		annual	0	No representative data available.
Bis(2-ethylhexyl) phthalate	µg/L		annual	0	No representative data available.
Boron	µg/L		annual	0	No representative data available.
Bromomethane	µg/L		annual	0	No representative data available.

Table 10. Instream Conditions and Discharger Flows for the CONSWLA Model

Parameter	Units	Outfall	Season	Value	Basis
Cadmium	µg/L		annual	0	STORET[C]; 38 values, 38<MDL, 2006-2011
Chlorine, Total Residual	µg/L		annual	0	No representative data available.
Chromium	µg/L		annual	1	STORET[C]; 12 values, 11<MDL, 2006-2011
Chromium^{+6} (dissolved)	µg/L		annual	0	No representative data available.
Chloroform	µg/L		annual	0	No representative data available.
Cobalt	µg/L		annual	0	No representative data available.
Copper	µg/L		annual	5	STORET[C]; 38 values, 30<MDL, 2006-2011
Cyanide, Free	µg/L		annual	0	No representative data available
Fluoride	µg/L		annual	0	No representative data available.
Iron	µg/L		annual	719	STORET[C]; 38 values, 0<MDL, 2006-2011
Lead	µg/L		annual	1	STORET[C]; 38 values, 35<MDL, 2006-2011
Molybdenum	µg/L		annual	0	No representative data available.
Naphthalene	µg/L		annual	0	No representative data available.
Nickel	µg/L		annual	2.75	STORET[C]; 12 values, 0<MDL, 2006-2011
Nitrate+Nitrate	mg/L		annual	0.61	STORET[C]; 38 values, 0<MDL, 2006-2011
Phenol	µg/L		annual	0	No representative data available.
Selenium	µg/L		annual	0	STORET[C]; 38 values, 38<MDL, 2006-2011
Silver	µg/L		annual	0	No representative data available.
Strontium	µg/L		annual	127	STORET[C]; 38 values, 0<MDL, 2006-2011
Total Filterable Residue	mg/L		annual	252	STORET[C]; 38 values, 0<MDL, 2006-2011
Tetrachloroethylene	µg/L		annual	0	No representative data available.
Thallium	µg/L		annual	0	No representative data available.
Tin	µg/L		annual	0	No representative data available.
Zinc	µg/L		annual	5	STORET[C]; 38 values, 33<MDL, 2006-2011

C = STORET station # 602280 Mahoning River @ Leavittsburg - Leavitt Rd. river mile 45.51
CONSWLA = conservative substance wasteload allocation
MDL = analytical method detection limit

NPDES = National Pollutant Elimination Discharge System
STORET = United States Environmental Protection Agency Storage and Retrieval Database
USGS = United States Geological Survey
WWTP = wastewater treatment plant

Table 11. Summary of Effluent Limits to Maintain Applicable Water Quality Criteria

Parameter	Units	Human Health	Agri Supply	Average Aquatic Life	Maximum Aquatic Life	Inside Mixing Zone Maximum
Arsenic[B]	µg/L	–	473	374	830.[A]	680
Barium	µg/L	–	–	339	3174	4000
Bis(2-ethylhexyl)phthalate	µg/L	462	–	35	4466.[A]	2100
Bromomethane	µg/L	30140.[A]	–	66	152.[A]	75
Cadmium	µg/L	–	–	2.1[E]	19.[A]	19
Chlorine – Total Residual	µg/L	--	--	14	23	38
Chromium[B]	µg/L	–	–	634	6100.[A]	6100
Hexavalent Chromium (dissolved)[B]	µg/L	–	–	25.[E]	39.[A]	31
Copper	µg/L	–	–	51.[D]	51.[A,D]	51
Cyanide, Free	µg/L	681400.[A]	–	20	73	92
Lead	µg/L	–	–	25.[D,E]	550.[A,D]	550
Mercury[C]	ng/L	12	10000.[A]	910	1700	3400
Molybdenum[B]	µg/L	–	–	53730	497500.[A]	370000
Nickel[B]	µg/L	–	–	377	1600.[A]	1600
Selenium	µg/L	52020	236	11.[E]	–	–
Silver	µg/L	–	–	3.0	19.[D]	49.[D]
Total Filterable Residue	mg/L	–	–	1949	–	–
Total Filterable Residue	mg/L	–	–	622.[E]	–	–
Zinc	µg/L	--	--	410.[A]	410.[A]	410

A = Allocation must not exceed the Inside Mixing Zone Maximum.
B = Parameter would not require a wasteload allocation (WLA) based on reasonable potential procedures, but allocation requested for use in pretreatment program.
C = Bioaccumulative Chemical of Concern; no mixing zone allowed after 11/15/2010, criteria must be met at end-of-pipe unless the requirements for an exception are met as listed in Ohio Administrative Code 3745-2-08.
D = WLA based on applicable dissolved metal translator.
E = Limit to meet Pennsylvania water quality criteria.

Table 12. Parameter Assessment

Group 1: Due to a lack of criteria, the following parameters could not be evaluated at this time.

Chloride	Phosphorus

Group 2: PEQ < 25% of WQS or all data below minimum detection limit; WLA not required. No limit recommended, monitoring optional.

Bromodichloromethane	Bromoform	Arsenic
Chromium	Dibromochloromethane	Chloroform
Methylene Chloride	Molybdenum	Iron
Nitrate+Nitrite	Toluene	Nickel
Strontium		

Group 3: PEQmax < 50% of maximum PEL and PEQavg < 50% of average PEL. No limit recommended, monitoring optional.

Bromomethane	Hexavalent Chromium (dissolved)	
Lead	Zinc	Copper

Group 4: PEQ_{max} > 50% but <100% of the maximum PEL or PEQ_{avg} > 50% but < 100% of the average PEL. Monitoring is appropriate.

Barium

Group 5: Maximum PEQ > 100% of the maximum PEL or average PEQ > 100% of the average PEL, or either the average or maximum PEQ is between 75 and 100% of the PEL and certain conditions that increase the risk to the environment are present. Limit recommended.

<u>Limits to Protect Numeric Water Quality Criteria</u>

		Recommended Effluent Limits		
Parameter	*Units*	*Season*	*Average*	*Maximum*
Bis(2-ethylhexyl)phthalate[A]	µg/L	Annual	35	2100
Cadmium	µg/L	Annual	2.1[E]	19
Chlorine, Total Residual	µg/L	Summer	14	23
Cyanide, Free	µg/L	Annual	20	73
Mercury	ng/L	Annual	12	1700
Selenium[A]	µg/L	Annual	11	--
Silver	µg/L	Annual	3	19
Total Filterable Residue[A]	mg/L	Annual	1949	--
Total Filterable Residue[A]	mg/L	Annual	622.[E]	--

a = see "Reasonable Potential/ Effluent Limits/Hazard Management Decisions," pages 15 and 16
e = Limit to meet Pennsylvania water quality criteria.
PEL = preliminary effluent limit

PEQ = projected effluent quality
WLA = wasteload allocation
WQS = water quality standard

Table 13. Final Effluent Limits for Outfall 001

Parameter	Units	Concentration		Loading (kg/day)[a]		Basis[b]
		30 Day Average	Daily Maximum	30 Day Average	Daily Maximum	
Water Temperature	°C	- - - - - - - - - - - - - Monitor - - - - - - - - - - - - -				EP/M[c]
Dissolved Oxygen	mg/L	5.0 Minimum		--	--	EP
Total Suspended Solids						
Summer	mg/L	20.0	30.0[d]	2653	3980[d]	EP/PD
Winter	mg/L	30.0	45.0[d]	3980	5969[d]	EP/PD
Oil and Grease	mg/L	10 Maximum		--	--	EP/WQS
Ammonia						
Summer	mg/L	3.0	4.5[d]	1990	2915[d]	EP/PD
Winter	mg/L	15.0	22.0[d]	398	597[d]	EP/PD
Total Kjeldahl Nitrogen	mg/L	- - - - - - - - - - - - - Monitor - - - - - - - - - - - - -				EP/M
Nitrite + Nitrate	mg/L	- - - - - - - - - - - - - Monitor - - - - - - - - - - - - -				EP/M
Phosphorus	mg/L	- - - - - - - - - - - - - Monitor - - - - - - - - - - - - -				EP/M
Cyanide, Free (Final)	µg/L	20	73	2.65	9.68	WLA
Selenium[e]	µg/L	- - - - - - - - - - - - - Monitor - - - - - - - - - - - - -				RP
Barium[e]	µg/L	- - - - - - - - - - - - - Monitor - - - - - - - - - - - - -				RP
Nickel	µg/L	- - - - - - - - - - - - - Monitor - - - - - - - - - - - - -				EP/M
Silver (Final)	µg/L	3.0	19	0.397	2.52	WLA
Zinc	µg/L	- - - - - - - - - - - - - Monitor - - - - - - - - - - - - -				WLA
Cadmium (Final)	µg/L	2.1	19	0.278	2.52	WLA
Lead	µg/L	- - - - - - - - - - - - - Monitor - - - - - - - - - - - - -				EP/M
Chromium	µg/L	- - - - - - - - - - - - - Monitor - - - - - - - - - - - - -				EP/M
Copper	µg/L	- - - - - - - - - - - - - Monitor - - - - - - - - - - - - -				EP/M
Hexavalent Chromium (Dissolved)	µg/L	- - - - - - - - - - - - - Monitor - - - - - - - - - - - - -				EP/M
E. coli (Summer)	#/100 mL	126	284[d]	--	--	WQS
Bis(2-ethylhexyl)phthalate[e]	µg/L	- - - - - - - - - - - - - Monitor - - - - - - - - - - - - -				RP
Flow Rate	MGD	- - - - - - - - - - - - - Monitor - - - - - - - - - - - - -				EP/M[c]
Chlorine, Total Residual (Summer – Final)	mg/L	--	0.023	--	--	WLA
Mercury	ng/L	12.0	1700	0.225	0.00159	WLA
Acute Toxicity						
Ceriodaphnia dubia	TUa	- - - - - - - - - - - - - Monitor - - - - - - - - - - - - -				WET
Pimephales promelas	TUa	- - - - - - - - - - - - - Monitor - - - - - - - - - - - - -				WET
Chronic Toxicity						
Ceriodaphnia dubia	TUc	- - - - - - - - - - - - - Monitor - - - - - - - - - - - - -				WET
Pimephales promelas	TUc	- - - - - - - - - - - - - Monitor - - - - - - - - - - - - -				WET

Table 13. Final Effluent Limits for Outfall 001

Parameter	Units	Concentration		Loading (kg/day)[a]		Basis[b]
		30 Day Average	Daily Maximum	30 Day Average	Daily Maximum	
pH	S.U.	9.0 - 6.5		--	--	WQS
Carbonaceous Biochemical Oxygen Demand (5 day)						
Summer	mg/L	12.0	17.0[d]	1590	2255[d]	EP/PD
Winter	mg/L	25.0	40.0[d]	3316	5306[d]	EP/PD
Total Filterable Residue[e]	mg/L	- - - - - - - - - - - - - Monitor - - - - - - - - - - - - -				RP

[a] Effluent loadings based on average design discharge flow of 35 MGD.

[b] Definitions:
EP = Existing Permit
M = Division of Surface Water NPDES Permit Guidance 1: Monitoring frequency requirements for Sanitary Discharges
PD = Plant Design
RP = Reasonable Potential for requiring water quality-based effluent limits and monitoring requirements in permits (3745-33-07(A))
WET = Whole Effluent Toxicity (OAC 3745-33-07(B))
WLA = Wasteload Allocation procedures (OAC 3745-2)
WQS = Ohio Water Quality Standards (OAC 3745-1)

[c] Monitoring of flow and other indicator parameters is specified to assist in the evaluation of effluent quality and treatment plant performance.

[d] 7 day average limit.

[e] See "Reasonable Potential/ Effluent Limits/Hazard Management Decisions," pages 15 and 16.

Attachment 1. Combined Sewer Overflow Station List

RC = regulating chamber; OF = overflow; MH = manhole; PS = pump station

Outfall #	Description	Receiving Stream	Outfall #	Description	Receiving Stream
002	RC #33	Mahoning River	056	PS OF	Mill Creek
003	OF #20	Mahoning River	057	RC #104	Mahoning River
004	OF #19	Mahoning River	058	PS OF	Cranberry Run
005	RC #18	Mill Creek	062	PS OF	Dry Run Creek
006	RC #15	Mill Creek	067	OF MH	Mill Creek
007	OF #11	Mill Creek	068	OF MH	Calvary Run
008	RC #9	Mill Creek	069	OF MH	Bears Den Creek
009	RC #7	Mill Creek	073	OF MH	Mill Creek
011	RC #8	Mill Creek	074	OF MH	Mill Creek
012	OF #6	Mill Creek	075	OF MH	Jones Creek
013	OF #5	Mill Creek	077	OF MH	Pine Hollow Creek
014	RC #4	Mill Creek	078	OF MH	Pine Hollow Creek
015	OF #1	Jones Creek	080	OF MH	Sugar Creek
016	RC #2	Jones Creek	082	OF MH	Sugar Creek
017	RC #3	Jones Creek	086	OF MH	Mahoning River
018	RC #21	Mahoning River	087	OF MH	Crandall Run
019	RC #24	Mahoning River	088	OF MH	Crandall Run
020	RC #25	Mahoning River	090	OF MH	Mahoning River
021	RC #28	Mahoning River	093	OF MH	Mill Creek
022	RC #30	Mahoning River	095	OF MH	Sugar Creek
023	OF #37	Mahoning River	096	OF MH	Calvary Run
024	RC #38	Mahoning River	098	OF MH	Mahoning River
025	OF #39	Mahoning River	099	OF MH	Mahoning River
026	RC #48	Crab Creek	101	OF MH	Mahoning River
027	RC #50	Crandall Run	102	OF MH	Mahoning River
028	RC #51	Crab Creek	103	OF MH	Mahoning River
029	RC #52	Crab Creek	104	OF MH	Mill Creek
030	RC #53	Crab Creek	105	OF MH	Jones Creek
031	OF #54	Crab Creek	106	OF MH	Crandall Run
032	OF #56	Crab Creek	107	OF MH	Crandall Run
034	OF #61	Crab Creek	109	OF MH	Pine Hollow Creek
035	RC #63	Kimmel Run	110	OF MH	Crab Creek
036	OF #64	Kimmel Run	112	OF MH	Mahoning River
037	RC #65	Crab Creek	113	OF MH	Mahoning River
039	RC #73	Crab Creek	115	OF MH	Jones Creek
041	RC #74	Crab Creek	116	OF MH	Jones Creek
042	RC #102	Mahoning River	121	OF MH	Mahoning River
043	OF #103	Mahoning River	122	OF MH	Dry Run Creek

Outfall #	Description	Receiving Stream	Outfall #	Description	Receiving Stream
044	OF #101	Mahoning River	125	OF MH	Mahoning River
045	RC #105	Crab Creek	126	OF MH	Sugar Creek
046	RC #106	Crab Creek	127	OF MH	Sugar Creek
047	RC #107	Crab Creek	128	OF MH	Mahoning River
048	RC #108	Mahoning River	129	OF MH	Sugar Creek
049	RC #110	Mahoning River	130	OF MH	Mahoning River
050	RC #111	Pine Hollow Creek	131	OF MH	Mahoning River
051	RC #112	Mahoning River	132	OF MH	Mahoning River
052	RC #113	Jones Creek	133	OF MH	Mahoning River
053	RC #114	Mahoning River	134	OF MH	Mahoning River
054	RC #115	Mahoning River	136	OF MH	Jones Creek
055	OF MH	Mahoning River	137	Detention Basin OF	Unnamed tributary to Yellow Creek
			138	OF MH	Pine Hollow Creek