National Pollutant Discharge Elimination System (NPDES) Permit Program

FACT SHEET

Regarding an NPDES Permit To Discharge to Waters of the State of Ohio
for **Aleris Rolled Products, Inc.**

Public Notice No.: 15-09-020
Public Notice Date: September 10, 2015
Comment Period Ends: October 10, 2015

Ohio EPA Permit No.: **4IC00002*LD**
Application No.: **OH0003891**

Name and Address of Applicant:
Aleris Rolled Products, Inc.
1 Reynolds Road
Ashville, Ohio 43103-9535

Name and Address of Facility Where Discharge Occurs:
Aleris Rolled Products, Inc.
1 Reynolds Road
Ashville, Ohio 43103
Pickaway County

Receiving Water: **Walnut Creek**

Subsequent Stream Network: **Scioto River**
Ohio River

Introduction

Development of a Fact Sheet for NPDES permits is mandated by Title 40 of the Code of Federal Regulations (CFR), Section 124.8 and 124.56. This document fulfills the requirements established in those regulations by providing the information necessary to inform the public of actions proposed by the Ohio Environmental Protection Agency (Ohio EPA), as well as the methods by which the public can participate in the process of finalizing those actions.

This Fact Sheet is prepared in order to document the technical basis and risk management decisions that are considered in the determination of water quality based NPDES Permit effluent limitations. The technical basis for the Fact Sheet may consist of evaluations of promulgated effluent guidelines, existing effluent quality, instream biological, chemical and physical conditions, and the relative risk of alternative effluent limitations. This Fact Sheet details the discretionary decision-making process empowered to the Director by the Clean Water Act (CWA) and Ohio Water Pollution Control Law (Ohio Revised Code [ORC] 6111). Decisions to award variances to Water Quality Standards (WQS) or promulgated effluent guidelines for economic or technological reasons will also be justified in the Fact Sheet where necessary.

No antidegradation review was necessary.

Effluent limits based on available treatment technologies are required by Section 301(b) of the CWA. Many of these have already been established by the United States Environmental Protection Agency (U.S. EPA) in the effluent guideline regulations (a.k.a. categorical regulations) for industry categories in 40 CFR Parts 405-499. Technology-based regulations for publicly-owned treatment works are listed in the Secondary Treatment Regulations (40 CFR Part 133). If regulations have not been established for a category of dischargers, the director may establish technology-based limits based on best professional judgment (BPJ).

Ohio EPA reviews the need for water-quality-based limits on a pollutant-by-pollutant basis. Wasteload allocations (WLAs) are used to develop these limits based on the pollutants that have been detected in the discharge, and the receiving water's assimilative capacity. The assimilative capacity depends on the flow in the

water receiving the discharge, and the concentration of the pollutant upstream. The greater the upstream flow, and the lower the upstream concentration, the greater the assimilative capacity is. Assimilative capacity may represent dilution (as in allocations for metals), or it may also incorporate the break-down of pollutants in the receiving water (as in allocations for oxygen-demanding materials).

The need for water-quality-based limits (WQBELs) is determined by comparing the WLA for a pollutant to a measure of the effluent quality. The measure of effluent quality is called Projected Effluent Quality (PEQ). This is a statistical measure of the average and maximum effluent values for a pollutant. As with any statistical method, the more data that exists for a given pollutant, the more likely that PEQ will match the actual observed data. If there is a small data set for a given pollutant, the highest measured value is multiplied by a statistical factor to obtain a PEQ; for example if only one sample exists, the factor is 6.2, for two samples - 3.8, for three samples - 3.0. The factors continue to decline as samples sizes increase. These factors are intended to account for effluent variability, but if the pollutant concentrations are fairly constant, these factors may make PEQ appear larger than it would be shown to be if more sample results existed.

Summary of Permit Conditions

Outfall 001 has been removed from the permit.

The effluent limits and monitoring requirements proposed for the following parameters at outfall 002 are the same as in the previous permit: ammonia, dissolved oxygen, *Escherichia coli*, flow rate, oil and grease, pH, and phosphorus.

Monitoring frequencies are proposed to increase from biweekly to weekly for total suspended solids and 5-day carbonaceous biochemical oxygen demand ($CBOD_5$). These changes are due to limit violations (Table 2) and the need to provide more consistent plant operation.

Monitoring frequencies are proposed to decrease from biweekly to monthly for chromium, free cyanide, and zinc. This is due to a lack of limit violations and because plant data shows a low risk of exceeding the water quality standards for these parameters.

Decreased concentration and loading limits are proposed for aluminum and chromium due to a change in production rates. Since 2011, the production rate for the wide line process has decreased from 3.935 million square feet to 3.060 million square feet. Though the limits for aluminum have decreased, monitoring for this parameter will continue on a biweekly schedule.

Decreased limits are proposed for zinc because of lowered effluent limits to maintain applicable water quality criteria.

New monitoring without limits is proposed for dissolved hexavalent chromium, copper, and total filterable residue. The monitoring requirement for dissolved hexavalent chromium is due to the fact that this parameter is used in the manufacturing process but there is no recent effluent data for it. The added monitoring requirement of copper is due to its risk assessment in Table 11. Total filterable residue is being added because of best technical judgment (BTJ) and because limited data is available for total filterable residue, which is an emerging water quality issue. Total filterable residue is proposed to be monitored on a biweekly basis while the other parameters mentioned in this paragraph will be monitored on a monthly basis.

Quarterly acute toxicity monitoring of *Pimephales promelas* and *Ceriodaphnia dubia* have been added to the permit. A toxicity reduction evaluation (TRE) has been included in Part I.C. of the permit due to the high mortality of *P. promelas* and *C. dubia* in the effluent discharge.

The current permit limit for free cyanide is proposed to continue. This permit no longer authorizes the use of method 4500 CN-I from Standard Methods for free cyanide testing. As soon as possible, the permittee must

begin using either ASTM D7237-10 or OIA-1677-09 both of which are approved methods for free cyanide listed in 40 CFR 136.

In Part II of the permit, special conditions are included that address operator certification, minimum staffing and operator of record; whole effluent toxicity (WET) testing; and outfall signage.

Table of Contents

Page

Introduction 1

Summary of Permit Conditions 2

Procedures for Participation in the Formulation of Final Determinations 6

Location of Discharge/Receiving Water Use Classification 8

Facility Description 8

Description of Existing Discharge 9

Assessment of Impact on Receiving Waters 9

Development of Water-Quality-Based Effluent Limits 10

Reasonable Potential/ Effluent Limits/Hazard Management Decisions 12

Other Requirements 14

List of Figures

Figure 1. Location of Aleris Rolled Products, Inc. 16

Figure 2. Wastewater Generation Flow Diagram 17

Figure 3. Wastewater Flow Diagram 18

Figure 4. Proposed Wastewater Treatment Flow Diagram 19

Figure 5. Walnut Creek Study Area 20

List of Tables

Table 1. Average Annual Effluent Flow Rates 21

Table 2. Effluent Violations for Outfall 002 21

Table 3. Effluent Characterization Using Ohio EPA Data 22

Table 4. Effluent Characterization Using Self-Monitoring Data 23

Table 5. Projected Effluent Quality 24

Table 6. Ohio EPA Toxicity Screening Results for Outfall 002 25

Table 7. Use Attainment Table 26

Table 8. Water Quality Criteria in the Study Area 26

Table 9. Instream Conditions and Discharger Flow 27

Table 10. Summary of Effluent Limits to Maintain Applicable Water Quality Criteria 29

Table 11. Parameter Assessment 30

Table 12. Final Effluent Limits for Outfall 002 31

List of Attachments

Attachment A. Calculation of Loading Limits for Outfall 002 Using Federal Effluent Guidelines 32

Procedures for Participation in the Formulation of Final Determinations

The draft action shall be issued as a final action unless the Director revises the draft after consideration of the record of a public meeting or written comments, or upon disapproval by the Administrator of the U.S. Environmental Protection Agency.

Within thirty days of the date of the Public Notice, any person may request or petition for a public meeting for presentation of evidence, statements or opinions. The purpose of the public meeting is to obtain additional evidence. Statements concerning the issues raised by the party requesting the meeting are invited. Evidence may be presented by the applicant, the state, and other parties, and following presentation of such evidence other interested persons may present testimony of facts or statements of opinion.

Requests for public meetings shall be in writing and shall state the action of the Director objected to, the questions to be considered, and the reasons the action is contested. Such requests should be addressed to:

Legal Records Section
Ohio Environmental Protection Agency
P.O. Box 1049
Columbus, Ohio 43216-1049

Interested persons are invited to submit written comments upon the discharge permit. Comments should be submitted in person or by mail no later than 30 days after the date of this Public Notice. Deliver or mail all comments to:

Ohio Environmental Protection Agency
Attention: Division of Surface Water
Permits Processing Unit
P.O. Box 1049
Columbus, Ohio 43216-1049

The Ohio EPA permit number and Public Notice numbers should appear on each page of any submitted comments. All comments received no later than 30 days after the date of the Public Notice will be considered.

Citizens may conduct file reviews regarding specific companies or sites. Appointments are necessary to conduct file reviews, because requests to review files have increased dramatically in recent years. The first 250 pages copied are free. For requests to copy more than 250 pages, there is a five-cent charge for each page copied. Payment is required by check or money order, made payable to Treasurer State of Ohio.

For additional information about this fact sheet or the draft permit, contact Phoebe Low, (614) 644-2134, Phoebe.Low@epa.ohio.gov.

Information Regarding Certain Water Quality Based Effluent Limits

This draft permit may contain proposed WQBELs for parameters that **are not** priority pollutants. (See the following link for a list of the priority pollutants: http://epa.ohio.gov/portals/35/pretreatment/Pretreatment_Program_Priority_Pollutant_Detection_Limits.pdf .) In accordance with ORC 6111.03(J)(3), the Director established these WQBELs after considering, to the extent consistent with the Federal Water Pollution Control Act, evidence relating to the technical feasibility and economic reasonableness of removing the polluting properties from those wastes and to evidence relating to conditions calculated to result from that action and their relation to benefits to the people of the state and to accomplishment of the purposes of this chapter. This determination was made based on data and information available at the time the permit was drafted, which included the contents of the timely submitted NPDES permit renewal application, along with any and all pertinent information available to the Director.

This public notice allows the permittee to provide to the Director for consideration during this public comment period additional site-specific pertinent and factual information with respect to the technical feasibility and economic reasonableness for achieving compliance with the proposed final effluent limitations for these parameters. The permittee shall deliver or mail this information to:

Ohio Environmental Protection Agency
Attention: Division of Surface Water
Permits Processing Unit
P.O. Box 1049
Columbus, Ohio 43216-1049

Should the applicant need additional time to review, obtain or develop site-specific pertinent and factual information with respect to the technical feasibility and economic reasonableness of achieving compliance with these limitations, written notification for any additional time shall be sent to the above address no later than 30 days after the Public Notice Date on Page 1.

Should the applicant determine that compliance with the proposed WQBELs for parameters other than the priority pollutants is technically and/or economically unattainable, the permittee may submit an application for a variance to the applicable WQS used to develop the proposed effluent limitation in accordance with the terms and conditions set forth in OAC 3745-33-07(D). The permittee shall submit this application to the above address no later than 30 days after the Public Notice Date.

Alternately, the applicant may propose the development of site-specific WQS pursuant to OAC 3745-1-35. The permittee shall submit written notification regarding their intent to develop site specific WQS for parameters that are not priority pollutants to the above address no later than 30 days after the Public Notice Date.

Location of Discharge/Receiving Water Use Classification

Aleris Rolled Products, Inc. discharges to Walnut Creek at River Mile (RM) 4.43. Figure 1 shows the approximate location of the facility.

This segment of the Walnut Creek is described by Ohio EPA River Code: 02-078, U.S. EPA River Reach: 05060001-180, County: Pickaway, Ecoregion: Eastern Corn Belt Plains. Walnut Creek is designated for the following uses under Ohio's WQS (OAC 3745-1-09): Exceptional Warmwater Habitat (EWH), Agricultural Water Supply (AWS), Industrial Water Supply (IWS), Class B Primary Contact Recreation (PCR).

Use designations define the goals and expectations of a waterbody. These goals are set for aquatic life protection, recreation use and water supply use, and are defined in the Ohio WQS (OAC 3745-1-07). The use designations for individual waterbodies are listed in rules -08 through -32 of the Ohio WQS. Once the goals are set, numeric WQS are developed to protect these uses. Different uses have different water quality criteria.

Use designations for aquatic life protection include habitats for coldwater fish and macroinvertebrates, warmwater aquatic life and waters with exceptional communities of warmwater organisms. These uses all meet the goals of the federal CWA. Ohio WQS also include aquatic life use designations for waterbodies which cannot meet the CWA goals because of human-caused conditions that cannot be remedied without causing fundamental changes to land use and widespread economic impact. The dredging and clearing of some small streams to support agricultural or urban drainage is the most common of these conditions. These streams are given Modified Warmwater [or MWH] or Limited Resource Water designations.

Recreation uses are defined by the depth of the waterbody and the potential for wading or swimming. Uses are defined for bathing waters, swimming/canoeing (PCR) and wading only (Secondary Contact - generally waters too shallow for swimming or canoeing).

Water supply uses are defined by the actual or potential use of the waterbody. Public Water Supply designations apply near existing water intakes so that waters are safe to drink with standard treatment. Most other waters are designated for AWS and IWS.

Facility Description

This facility produces aluminum coils, aluminum/steel siding, and aluminum downspouts for the building industry. The basic manufacturing process involves cleaning of aluminum coils, chromium conversion coating, painting, oven curing, and recoiling. The painted coils are further fabricated into siding, downspouts, and other trim items.

Under Federal Effluent Guidelines, the operation falls under 40 CFR Part 465.30, Subpart C – Aluminum Basis Material Subcategory. Limitations are based on 40 CFR Part 465.31 (Best Practicable Control Technology Currently Available), 40 CFR Part 465.32 (Best Available Technology Economically Available), and 40 CFR 465.33 (New Source Performance Standards). See Attachment A for details and calculations. In 2011, the facility installed a new, separate aluminum coiling coating line which increased the facility's average production rate from 875,000 ft^2 to 3,935,000 ft^2 of processed area.

Wastewater is generated in the coil cleaning process, the chromium conversion coating process, and from the miscellaneous sources such as cooling system blowdown. Paint wastes are drummed for off-site disposal. The industrial wastewater is also pretreated before mixing with the sanitary wastewater. The pretreatment system was also modified during 2011 to include a supplemental aluminum precipitation process treating the blow downs from the first two stages of the coil cleaning process.

Aleris Rolled Products, Inc. had its last major upgrade in 2012 where an oil skimming tank, pH adjustment tank, and flow equalization tanks were added to the wastewater treatment process. This increased the facility's average daily design flow from 0.019 million gallons per day (MGD) to its current average daily design flow of 0.0356 MGD.

As of 2015, Aleris Rolled Products, Inc. continues to upgrade its wastewater treatment operations. This upgrade includes the addition of a process wastewater flow equalization tank, process wastewater heat exchanger and cooling tower, effluent post aeration tank with a blower, and modifications to the piping system. The flow rates per year can be found in Table 1.

Aleris Rolled Products, Inc. has the following treatment processes which are shown in Figures 2 – 4:

- Oil Skimmer
- pH Adjustment
- Flow Equalization
- Ultrafiltration
- Extended Aeration
- Filter Clarification
- Slow Sand Filter
- Ultraviolet Disinfection
- Post Aeration
- Process Wastewater Temperature Control

Aleris Rolled Products, Inc. utilizes the following sewage sludge treatment processes:

- Gravity Thickening
- Plate and Frame Filter Press

Treated sludge is disposed of in a municipal landfill.

Aleris Rolled Products, Inc. is covered under industrial storm water general permit 4GR00199*EG.

Description of Existing Discharge

Aleris Rolled Products, Inc. had several effluent violations which are shown on Table 2. These violations were attributed to high process wastewater temperatures. Aleris Rolled Products, Inc. has upgraded its treatment process to address the issue.

Table 3 presents chemical specific data compiled from data collected by Ohio EPA.

Table 4 presents a summary of unaltered Discharge Monitoring Report (DMR) data for outfall 002. Data are presented for the period January 2010 to January 2015, and current permit limits are provided for comparison.

Table 5 summarizes the chemical specific data for outfall 002 by presenting the average and maximum PEQ values.

Table 6 summarizes the screening results of Ohio EPA bioassay sampling of the final effluent.

Assessment of Impact on Receiving Waters

The Mud Run-Walnut Creek watershed assessment unit, which includes Walnut Creek in the vicinity of Ashville, is listed as impaired for recreation and human health on Ohio's 303(d) list.

A Total Daily Maximum Load (TMDL) for bacteria, habitat and sedimentation report was published for the Walnut Creek Watershed on May 4, 2010. An assessment of the impact of a permitted point source on the immediate receiving waters includes an evaluation of the available chemical/physical, biological, and habitat data which have been collected by Ohio EPA pursuant to the Five-Year Basin Approach for Monitoring and NPDES Reissuance. Other data may be used provided it was collected in accordance with Ohio EPA methods and protocols as specified by the Ohio WQS and Ohio EPA guidance documents. Other information which may be evaluated includes, but is not limited to: NPDES permittee self-monitoring data; effluent and mixing zone bioassays conducted by Ohio EPA, the permittee, or U.S. EPA. The March 24, 2015, Supreme Court of Ohio decision *Fairfield Cty. Bd. Of Commrs. Vs. Nally, Slip Opinion No. 2015-Ohio-991* vacates this TMDL.

In evaluating this data, Ohio EPA attempts to link environmental stresses and measured pollutant exposure to the health and diversity of biological communities. Stresses can include pollutant discharges (permitted and unpermitted), land use effects, and habitat modifications. Indicators of exposure to these stresses include whole effluent toxicity tests, fish tissue chemical data, and fish health biomarkers (for example, fish blood tests).

Use attainment is a term which describes the degree to which environmental indicators are either above or below criteria specified by the Ohio WQS (OAC 3745-1). Assessing use attainment status for aquatic life uses primarily relies on the Ohio EPA biological criteria (OAC 3745-1-07; Table 7-15). These criteria apply to rivers and streams outside of mixing zones. Numerical biological criteria are based on measuring several characteristics of the fish and macroinvertebrate communities; these characteristics are combined into multimetric biological indices including the Index of Biotic Integrity (IBI) and modified Index of Well-Being (MIwb), which indicate the response of the fish community, and the Invertebrate Community Index (ICI), which indicates the response of the macroinvertebrate community. Numerical criteria are broken down by ecoregion, use designation, and stream or river size. Ohio has five ecoregions defined by common topography, land use, potential vegetation and soil type.

Three attainment status results are possible at each sampling location -full, partial, or non-attainment. Full attainment means that all of the applicable indices meet the biocriteria. Partial attainment means that one or more of the applicable indices fails meet the biocriteria. Nonattainment means that either none of the applicable indices meet the biocriteria or one of the organism groups indicates poor or very poor performance. An aquatic life use attainment table (see Table 7) is constructed based on the sampling results and is arranged from upstream to downstream and includes the sampling locations indicated by river mile, the applicable biological indices, the use attainment status (i.e., full, partial, or non), the Qualitative Habitat Evaluation Index (QHEI), and comments and observations for each sampling location.

The TMDL does not recommend any limits for the Walnut Creek Watershed.

The full TMDL report can be found at this website:
http://www.epa.ohio.gov/dsw/tmdl/SciotoRiver.aspx#122576536-tmdl-report.

Development of Water-Quality-Based Effluent Limits

Determining appropriate effluent concentrations is a multiple-step process in which parameters are identified as likely to be discharged by a facility, evaluated with respect to Ohio water quality criteria, and examined to determine the likelihood that the existing effluent could violate the calculated limits.

Parameter Selection
Effluent data for Aleris Rolled Products, Inc. were used to determine what parameters should undergo WLA. The parameters discharged are identified by the data available to Ohio EPA DMR data submitted by the permittee, compliance sampling data collected by Ohio EPA, and any other data submitted by the permittee, such as priority pollutant scans required by the NPDES application or by pretreatment, or other special conditions in the NPDES permit. The sources of effluent data used in this evaluation are as follows:

Self-monitoring data (DMR)	January 2010 through January 2015
Ohio EPA compliance sampling data	April and September 2013

Outliers
The data were examined and no values were removed from the evaluation.

This data is evaluated statistically, and PEQ values are calculated for each pollutant. Average PEQ (PEQ_{avg}) values represent the 95th percentile of monthly average data, and maximum PEQ (PEQ_{max}) values represent the 95th percentile of all data points (see Table 5).

The PEQ values are used according to Ohio rules to compare to applicable WQS and allowable WLA values for each pollutant evaluated. Initially, PEQ values are compared to the applicable average and maximum WQS. If both PEQ values are less than 25 percent of the applicable WQS, the pollutant does not have the reasonable potential to cause or contribute to exceedances of WQS, and no WLA is done for that parameter. If either PEQ_{avg} or PEQ_{max} is greater than 25 percent of the applicable WQS, a WLA is conducted to determine whether the parameter exhibits reasonable potential and needs to have a limit or if monitoring is required. See Table 11 for a summary of the screening results.

Wasteload Allocation
For those parameters that require a WLA, the results are based on the uses assigned to the receiving waterbody in OAC 3745-1. Dischargers are allocated pollutant loadings/concentrations based on the Ohio WQS (OAC 3745-1). Most pollutants are allocated by a mass-balance method because they do not degrade in the receiving water. WLAs using this method are done using the following general equation: Discharger WLA = (downstream flow x WQS) - (upstream flow x background concentration). Discharger WLAs are divided by the discharge flow so that the allocations are expressed as concentrations. The following dischargers in Walnut Creek were considered interactive with Aleris Rolled Products, Inc. (see Figure 5):

- Ashville Wastewater Treatment Plant (WWTP)

Ashville WWTP plans to expand and estimates that the average daily design flow will increase from 0.6 MGD to 0.8 MGD. The WLA of the interactive plants was calculated with the predicted flow of 0.8 MGD. Aleris Rolled Products, Inc. and Ashville WWTP were allocated together for some parameters due to the size of the plant discharges, the flows of the Walnut Creek, the relatively close proximity of the two plants, and the fact that both facilities evaluated WLAs for those particular parameters. The parameters allocated together included ammonia (summer and winter), chromium, dissolved hexavalent chromium, copper, cyanide, nickel, and zinc. A separate WLA was calculated for Aleris Rolled Products, Inc.'s other parameters so that the WLA values would be independent of Ashville WWTP's allocations. This was done because Ashville WWTP did not evaluate WLAs for those parameters.

Whole Effluent Toxicity WLA
Whole effluent toxicity (WET) is the total toxic effect of an effluent on aquatic life measured directly with a toxicity test. Acute WET measures short term effects of the effluent while chronic WET measures longer term and potentially more subtle effects of the effluent.

WQS for WET are expressed in Ohio's narrative "free from" WQS rule [OAC 3745-1-04(D)]. These "free froms" are translated into toxicity units (TUs) by the associated WQS Implementation Rule (OAC 3745-2-09). WLAs can then be calculated using TUs as if they were water quality criteria.

The WLA calculations for WET are similar to those for aquatic life criteria - using the chronic toxicity unit (TU_c) and 7Q10 flow for the average and the acute toxicity unit (TU_a) and 1Q10 flow for the maximum. These values are the levels of effluent toxicity that should not cause instream toxicity during critical low-flow conditions. For Aleris Rolled Products, Inc., the WLA values are1.0 TU_a and 64.55 TU_c.

The chronic toxicity unit (TU_c) is defined as 100 divided by the estimate of the effluent concentration which causes a 25% reduction in growth or reproduction of test organisms (IC_{25}):

$$TU_c = 100/IC_{25}$$

This equation applies outside the mixing zone for warmwater, modified warmwater, exceptional warmwater, coldwater, and seasonal salmonid use designations except when the following equation is more restrictive (*Ceriodaphnia dubia* only):

TU_c = 100/geometric mean of No Observed Effect Concentration and Lowest Observed Effect Concentration

However, Aleris Rolled Products, Inc. is not required to monitor for TU_c because the ratio of the downstream is more than twenty to one [OAC 3745-33-07(B)(11)(c)]. According to the data in Table 9, the dilution ratio of Aleris Rolled Products, Inc. to Walnut Creek is approximately 255 to one.

$$Stream\ Dilution\ Ratio = \frac{7Q10 + Facility\ Flow}{Facility\ Flow} = \frac{14\ cfs + 0.055\ cfs}{0.055\ cfs} = 255.5$$

According to OAC 3745-2-05(A)(2)(b), if the ratio between the stream and discharge flows is greater than 252.0, the wasteload allocation shall be calculated using twenty-five percent of the applicable stream design flow to calculate the wasteload allocation.

The acute toxicity unit (TU_a) is defined as 100 divided by the concentration in water having 50% chance of causing death to aquatic life (LC_{50}) for the most sensitive test species:

$$TU_a = 100/LC_{50}$$

This equation applies outside the mixing zone for warmwater, modified warmwater, exceptional warmwater, coldwater, and seasonal salmonid use designations.

<u>Reasonable Potential/ Effluent Limits/Hazard Management Decisions</u>

After appropriate effluent limits are calculated, the reasonable potential of the discharger to violate the WQS must be determined. Each parameter is examined and placed in a defined "group". Parameters that do not have a WQS or do not require a WLA based on the initial screening are assigned to either group 1 or 2. For the allocated parameters, the preliminary effluent limits (PEL) based on the most restrictive average and maximum WLAs are selected from Table 10. The average PEL (PEL_{avg}) is compared to the average PEQ (PEQ_{avg}) from Table 5, and the PEL_{max} is compared to the PEQ_{max}. Based on the calculated percentage of the allocated value [($PEQ_{avg} \div PEL_{avg}$) X 100, or ($PEQ_{max} \div PEL_{max}$) X 100)], the parameters are assigned to Group 3, 4, or 5. The groupings are listed in Table 11.

The final effluent limits are determined by evaluating the groupings in conjunction with other applicable rules and regulations. Table 12 presents the final effluent limits and monitoring requirements proposed for Aleris Rolled Products, Inc. outfall 002 and the basis for their recommendation. Unless otherwise indicated, the monitoring frequencies proposed in the permit are continued from the existing permit.

Flow Rate
Monitoring for flow rate is proposed to continue on a daily basis in order to evaluate the performance of the treatment plant.

Dissolved Oxygen, Total Suspended Solids, and $CBOD_5$

The limits proposed for dissolved oxygen, total suspended solids, and $CBOD_5$ are all based on plant design criteria. These limits are protective of WQS. The limits proposed for total suspended solids based on plant design criteria are more stringent than limits based on the categorical standards.

Oil and Grease, pH, and E. coli
Limits proposed for oil and grease, pH, and *E. coli* are based on WQS (OAC 3745-1-07). Class B PCR *E. coli* standards apply to Walnut Creek. The water quality-based limits proposed for oil and grease and pH are more stringent than limits based on the categorical standards.

Copper
The Ohio EPA risk assessment (Table 11) places copper in Group 5. This placement, as well as the data in Tables 3 – 5, indicates that the reasonable potential to exceed WQS exists and limits are necessary to protect water quality. Pollutants that meet this requirement are usually given permit limits under OAC 3745-33-07(A)(1). However, this outcome is based on only two data points which may not be representative of the plant effluent. Instead, monthly monitoring for copper is proposed in order to gather data representative of plant discharge.

Arsenic, Barium, Iron, Nickel, Nitrite+Nitrate, Selenium, and Strontium
The Ohio EPA risk assessment (Table 11) places the following in Groups 2 and 3: arsenic, barium, iron, nickel, nitrite+nitrate, selenium, and strontium. This placement as well as data from Tables 3 – 5, support that these parameters do not have the reasonable potential to contribute to WQS exceedances, and limits are not necessary to protect water quality. In addition, the fact that Walnut Creek is in full attainment supports that monitoring is not necessary for nitrite+nitrate. No new monitoring is proposed for any of the parameters listed in this paragraph.

Dissolved Hexavalent Chromium
The Ohio EPA risk assessment (Table 11) places hexavalent chromium in Group 2. This placement, as well as the data in Tables 3 – 5, support that this parameter does not have the reasonable potential to contribute to WQS exceedances. Monthly monitoring for dissolved hexavalent chromium is proposed to be added to the effluent monitoring table because there is no data available for this parameter even though it is used in the manufacturing process.

Aluminum, Chromium, Cyanide, and Zinc
The industrial processes of Aleris Rolled Products, Inc. are subject to coil coating point source categorical standards, aluminum basis metal subcategory. The categorical standard is specified in 40 CFR 465 Subpart C, which requires limits for pH and production-based loading limits for aluminum, chromium, cyanide, zinc, oil and grease and total suspended solids. The loading limits proposed for aluminum and chromium are based on the categorical standards, with the concentration limits derived using the plant flow.

Water quality-based concentration limits are proposed for cyanide and zinc with the loading limits derived using the plant flow. These limits are lower than the production-based limits and are necessary to protect water quality standards.

Due to a lack of limit violations over the past five years, monitoring for chromium, cyanide, and zinc are proposed to decrease from a biweekly to monthly basis. Monitoring for aluminum shall continue on a biweekly basis because four limit violations for this parameter occurred within the past five years. See Table 2 and Attachment A for more details.

The limits proposed for total suspended solids, pH and oil and grease were previously addressed.

Ammonia, Total Filterable Residue (Total Dissolved Solids), and Phosphorus
Based on BTJ, phosphorus is proposed to continue on a monthly basis and biweekly monitoring is proposed for ammonia and total filterable residue (total dissolved solids). Limited effluent data is available for total filterable residue, which is an emerging water quality issue for water treatment systems. The purpose of the monitoring is to obtain data on the level and variability of total filterable residue in the effluent.

Whole Effluent Toxicity Reasonable Potential
Based on evaluating the WET data presented in Table 6 and other pertinent data under the provisions of OAC 3745-33-07(B), Aleris Rolled Products, Inc. is placed in Category 2 with respect to WET. Quarterly acute testing of *P. promelas* and *C. dubia* are to be added to the permit requirements. In addition, a compliance schedule containing a conditional Toxicity Reduction Evaluation (TRE) is included in Part I.C. of the permit.

Sludge
The monitoring requirement proposed for the disposal of sewage sludge by removal to sanitary landfill is based on OAC 3745-40.

Other Requirements

Compliance Schedule
TRE – In order to reduce WET toxicity, Part I.C. of the permit will include the submittal of a TRE due six months after the effective date of the permit. The TRE includes an evaluation of treatment plant capacity and operations, process and influent flows, and the possibility of a Toxicity Identification Evaluation (TIE). A TIE is an ordered laboratory procedure for isolating different types of pollutants that may be contributing to the effluent toxicity. If Ohio EPA notifies the permittee that final effluent limits are imposed at outfall 4IC00002002, the permittee shall follow Part I.C., Item 1 in order to reach compliance with an acute toxicity limit of 1.0 TU_a 54 months after notification of the TRE requirement.

Operator Certification and Operator of Record
Operator certification requirements have been included in Part II of the permit in accordance with rules adopted in December 2006 (OAC 3745-7-02). These rules require Aleris Rolled Products, Inc. to have a Class I wastewater treatment plant operator in charge of the sewage treatment plant operations discharging through outfall 002. These rules also require the permittee to designate one or more operator of record to oversee the technical operation of the treatment works.

Low-Level Free Cyanide Testing
Currently there are two approved methods for free cyanide listed in 40 CFR 136.3 that have quantification levels lower than any water quality-based effluent limits:

- ASTM D7237-10 and OIA-1677-09 - Flow injection followed by gas diffusion amperometry

These methods will allow Ohio EPA make more reliable water quality-related decisions regarding free cyanide. Because the quantification levels are lower than any water quality-based effluent limits, it will also be possible to directly evaluate compliance with free cyanide limits.

New NPDES permits no longer authorize the use of method 4500 CN-I from Standard Methods for free cyanide testing. The new permits require permittees to begin using one of these approved methods as soon as possible. If a permittee must use method 4500 CN-I during the transition to an approved method, they are instructed to report the results on their DMR and enter “Method 4500 CN-I” in the remarks section.

Storm Water Compliance
To comply with industrial storm water regulations, the permittee requested coverage under the industrial storm water general permit. Permit 4GR00199*EG became effective on 5/3/12 and expires on 12/31/16. No later than 5/3/17, the permittee must request renewed coverage under the industrial storm water general permit or make

other provisions to comply with the industrial storm water regulations. Should the general permit be renewed, the facility must submit a Notice of Intent within 45 days of the effective date in order to renew its coverage.

Outfall Signage
Part II of the permit includes requirements for the permittee to maintain a sign at each outfall to the Walnut Creek providing information about the discharge. Signage at outfalls is required pursuant to OAC 3745-33-08(A).

Figure 1. Location of Aleris Rolled Products, Inc.

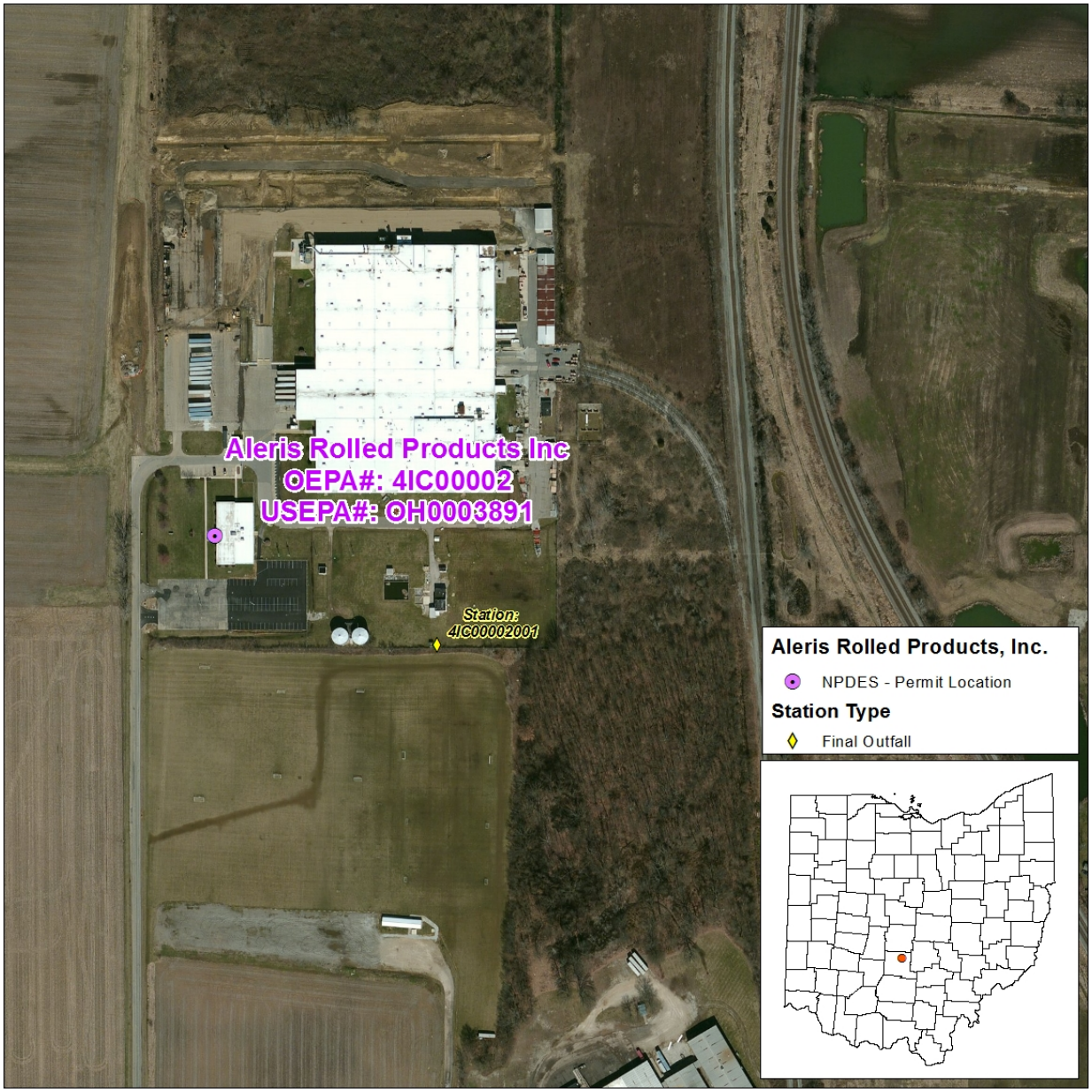

Figure 2. Wastewater Generation Flow Diagram

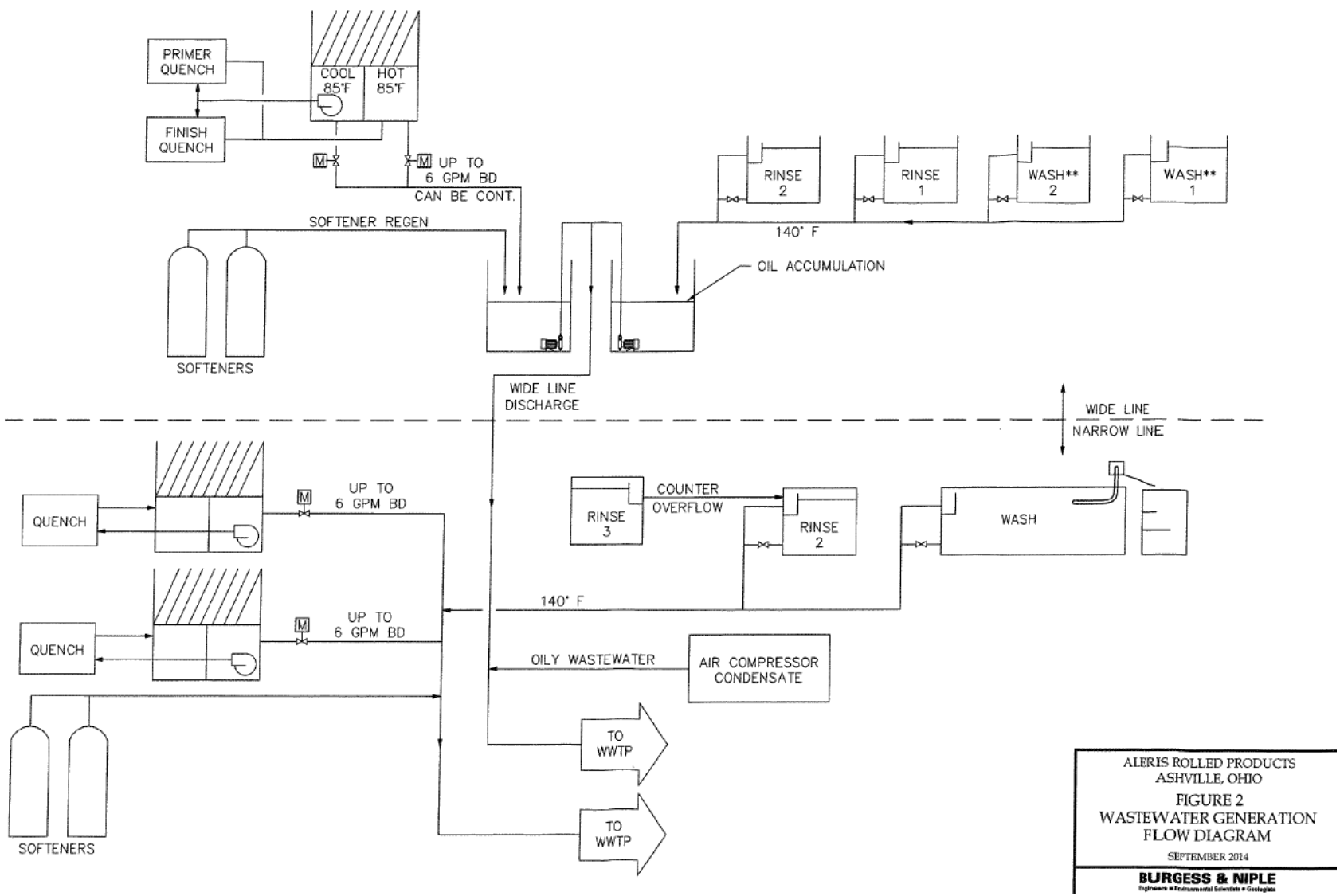

Figure 3. Wastewater Flow Diagram

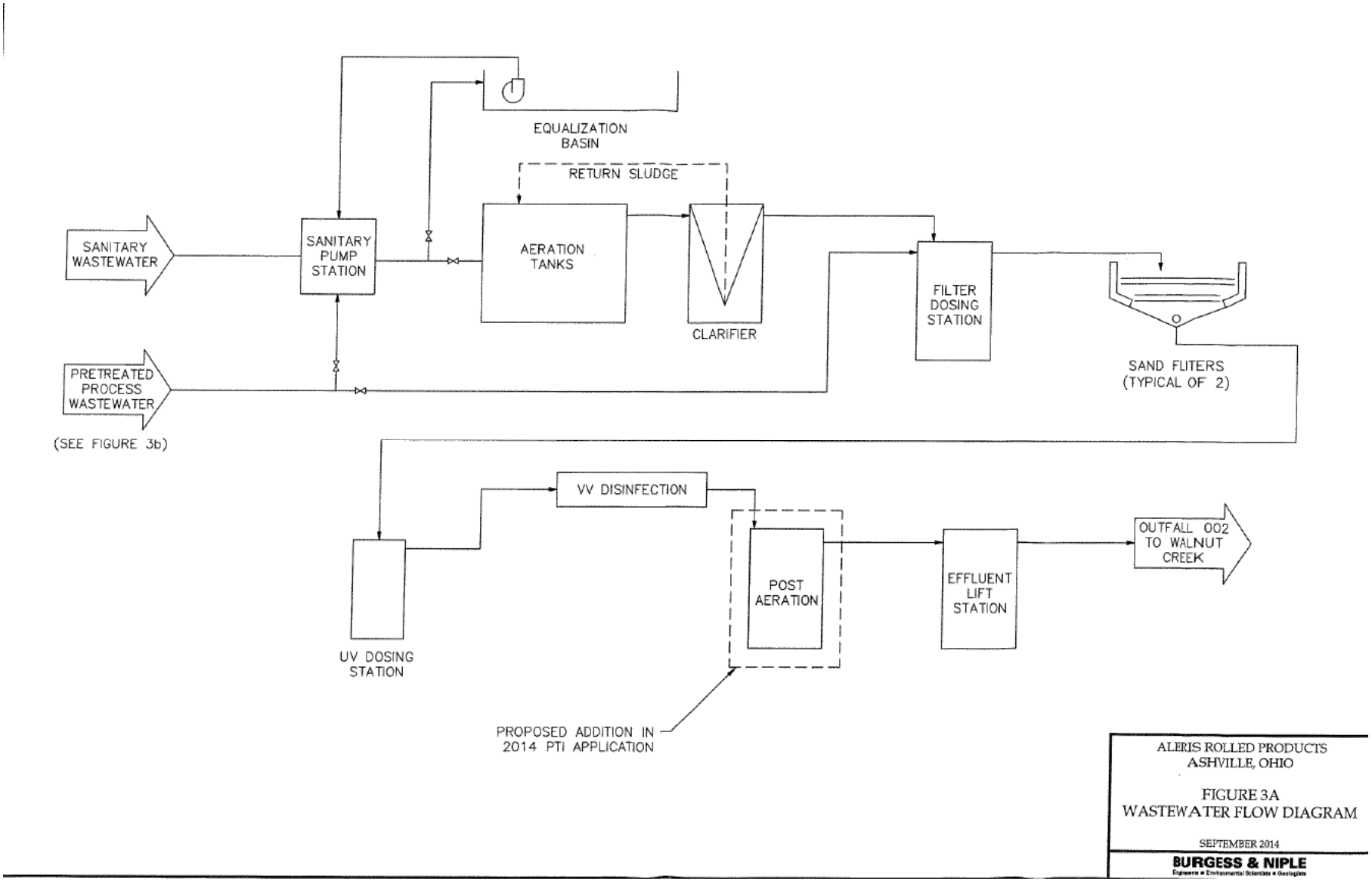

Figure 4. Proposed Wastewater Treatment Flow Diagram

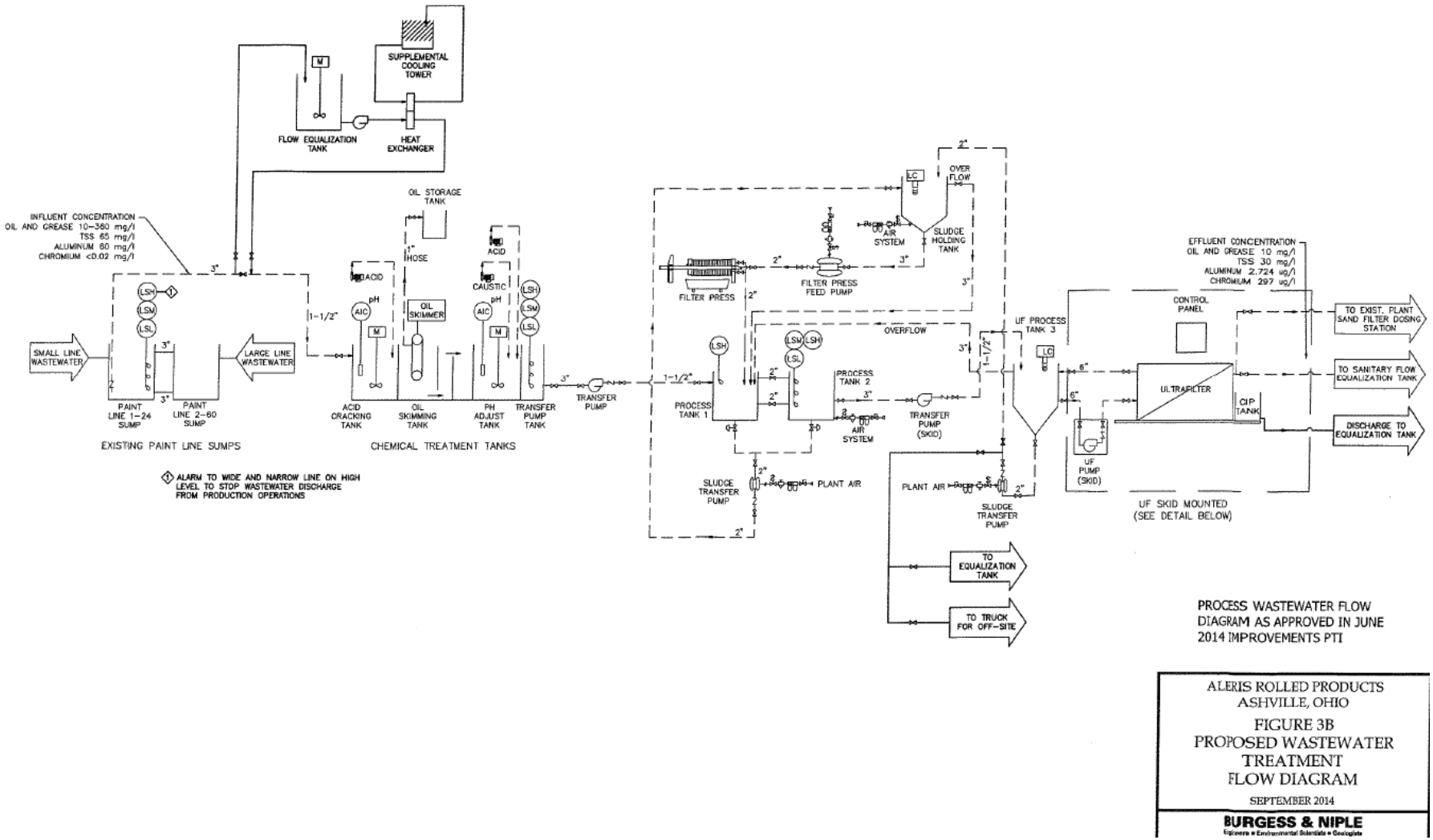

Figure 5. Walnut Creek Study Area

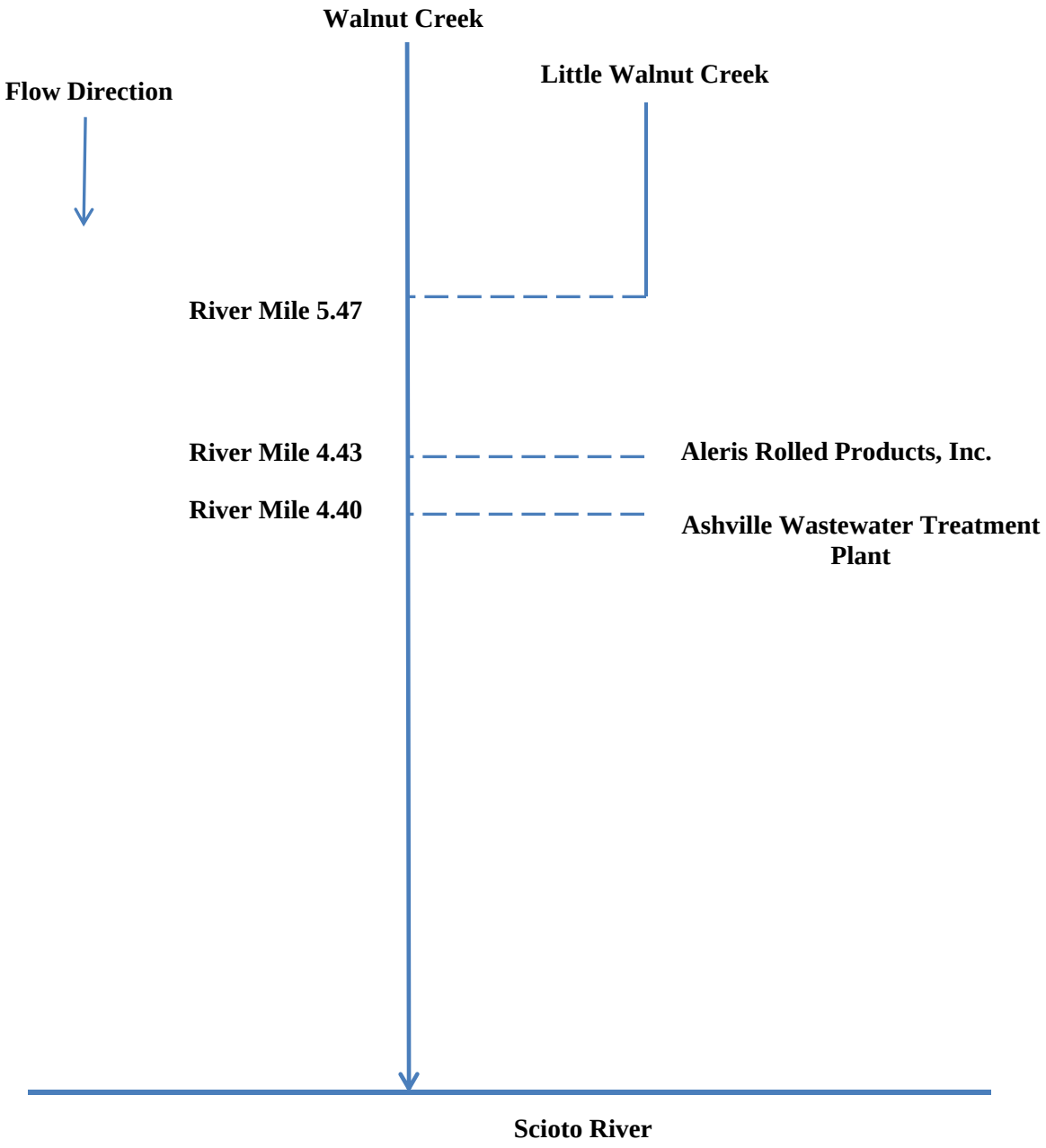

Table 1. Annual Effluent Flow Rates

Year	Annual Flow in MGD		
	50th Percentile	95th Percentile	Maximum
2010	0.0093	0.0202	0.0397
2011	0.0082	0.0220	0.0406
2012	0.0660	0.0194	0.2000
2013*	0.0110	0.0254	0.2020**
2014	0.0124	0.0265	0.06

MGD = million gallons per day
* Starting on February 1, 2013, Aleris Rolled Products began reported discharges based on its upgraded wastewater treatment system with a flow capacity of 35,600 gallons per day rather than the previous flow capacity of 19,000 gallons per day.
** The flow rate of 134 MGD was reported on February 27, 2013; this value is likely a typographical error and has been omitted from evaluation.

Table 2. Effluent Violations for Outfall 002

Parameter	2010	2011	2012	2013	2014
Aluminum	0	0	0	4	0
Carbonaceous Biochemical Oxygen Demand (5 day)	0	0	0	15	10
Dissolved Oxygen	0	0	0	12	0
Escherichia coli	0	1	0	2	2
Fecal coliform	0	2	0	0	0
Total Suspended Solids	0	0	1	3	5
Total	*0*	*3*	*1*	*36*	*17*

Table 3. Effluent Characterization Using Ohio EPA Data

Parameter	Units	4/30/13	9/30/13
Alkalinity	mg/L	433	286
Aluminum	µg/L	215	464
Ammonia	mg/L	0.056	AA(0.050)
Arsenic	µg/L	3.2	4.0
Barium	µg/L	48	33
Cadmium	µg/L	AA(0.2)	AA(0.2)
Calcium	mg/L	42	59
Carbonaceous Biochemical Oxygen Demand (5 day)	mg/L	9.0	12
Chloride	mg/L	218	512
Chromium	µg/L	AA(2.0)	11.7
Conductivity	Umhos/cm	3,720	7,900
Copper	µg/L	11.0	26.6
Cyanide, Free	mg/L	AA(5)	AA(5)
Hardness, total	mg/L	179	263
Iron	µg/L	AA(50)	74
Lead	µg/L	AA(2.0)	AA(2.0)
Magnesium	mg/L	18	28
Manganese	µg/L	41	90
Mercury	µg/L	AA(0.20)	AA(0.2)
Nickel	µg/L	2.1	AA(10)
Nitrate+Nitrite	mg/L	5.75	5.29
Oil & Grease	mg/L	AA(2.2)	AA(2.2)
Phosphorus	mg/L	2.85	3.32
Selenium	µg/L	AA(2.0)	2.1
Strontium	µg/L	1,860	4,490
Total Filterable Residue (Dissolved Solids)	mg/L	2,420	5,730
Total Kjeldahl Nitrogen	mg/L	0.98	1.94
Total Suspended Solids	mg/L	AA(5)	AA(5)
Zinc	µg/L	AA(10)	AA(10)

Table 4. Effluent Characterization Using Self-Monitoring Data

Parameter	Season	Units	Current Permit Limits		# Obs.	Percentiles		Data Range
			30 day	Daily		50th	95th	
Outfall 002 - Effluent								
Dissolved Oxygen	Summer	mg/L	5.0 Minimum		82	5.6	7.39	3.5-8
	Winter	mg/L			55	8.4	12	5.2-13.9
pH	Annual	S.U.	6.5 to 9.0		137	7.4	7.9	6.8-8.5
TSS	Annual	mg/L	30	45	49	0	59.8	0-99
Oil and Grease	Annual	mg/L	10 Maximum		49	0	0	0-0
Ammonia	Summer	mg/L	- - Monitoring - -		25	0	1.98	0-8.8
	Winter				24	0	2.26	0-16.3
Phosphorus	Annual	mg/L	- - Monitoring - -		32	3.3	11.2	0.74-15.9
Cyanide, Free	Annual	mg/L	--	0.0920	49	0	0	0-0.01
		kg/day	--	0.0124	48	0	0	0-0.000848
Zinc	Annual	µg/L	--	690	49	5.5	24.3	0-74.4
		kg/day	--	0.093	48	0.000123	0.00142	0-0.00231
Aluminum	Annual	µg/L	2,724	6,679	49	122	2800	0-15200
		kg/day	0.367	0.900	48	0.0071	0.0593	0-1.05
Chromium	Annual	µg/L	297	742	49	3.3	10.7	0-20.6
		kg/day	0.040	0.100	48	0.000187	0.000833	0-0.00146
Escherichia coli	Summer	#/100 mL	161	362	17	1	460	0-700
Flow Rate	Summer	MGD	- - Monitoring - -		365	0.0132	0.0257	0.001-0.202
	Winter				344	0.011	0.0301	0.0007-0.06
$CBOD_5$	Summer	mg/L	15	22.5	25	8.1	50.1	0-123
		kg/day	2.02	3.04	25	0.536	4.18	0-6.33
	Winter	mg/L	15	22.5	24	3.85	65.9	0-83.4
		kg/day	2.02	3.04	23	0.232	2.29	0-3.35
Outfall 586 – Sludge Monitoring								
Sludge Weight	Annual	Dry Tons	- - Monitoring - -		3	102	115	6.88-116

All values are based on annual records unless otherwise indicated.
* = For minimum pH, 5th percentile shown in place of 50th percentile;
** = For dissolved oxygen, 5th percentile shown in place of 95th percentile; a = weekly average."
$CBOD_5$ = 5-day carbonaceous biochemical oxygen demand
TSS = Total suspended solids

Table 5. Projected Effluent Quality

Parameter	Units	Number of Samples	Number > MDL	PEQ Average	PEQ Maximum
Aluminum	µg/L	88	79	1178.1	1593.5
Ammonia (Summer)	mg/L	29	10	20.374	15.167
Ammonia (Winter)	mg/L	22	12	40.216	35.844
Barium	µg/L	2	2	133.152	182.4
Chromium	µg/L	88	54	9.6137	14.189
Copper	µg/L	2	2	73.7884	101.08
Cyanide, Free	mg/L	19	1	0.01022	0.014
Dissolved Oxygen	mg/L	91	91	7.7969	10.213
Total Filterable Residue	mg/L	2	2	15895.02	21774
Iron	µg/L	2	1	205.276	281.2
Magnesium	mg/L	2	2	77.672	106.4
Manganese	µg/L	2	2	249.66	342
Oil and Grease	mg/L	85	3	3.43611	4.707
Phosphorus	mg/L	70	69	6.9921	10.736
Selenium	µg/L	2	1	5.8254	7.98
Strontium	µg/L	2	2	12455.26	17062
Zinc	µg/L	87	34	18.908	28.313
Chromium, dissolved hexavalent	µg/L	--	--	--	--
Arsenic	µg/L	2	2	11.096	15.2
Nickel	µg/L	2	1	5.8254	7.98
Nitrite + Nitrate	mg/L	2	2	15.9505	21.85
Phosphorus	mg/L	70	69	6.9921	10.736
Total Kjeldahl Nitrogen	mg/L	2	2	5.38156	7.372

MDL = analytical method detection limit
PEQ = projected effluent quality

Table 6. Ohio EPA Toxicity Screening Results for Outfall 002

	Ceriodaphnia dubia								*Pimephales promelas*							
	24 Hours				48 Hours				24 Hours				48 Hours			
Collection Date	UP	C	%M	TU_a	UP	C	%M	TU_a	UP	C	%M	TU_a	UP	C	%M	TU_a
4/23/2013	0	-	-	ND	0	-	-	ND	0	-	0	ND	0	-	0	ND
4/24/2013	0	0	55	ND	0	0	65	ND	0	0	0	ND	0	0	0	ND
4/23/13-4/24/13[a]	0	-	10	ND	0	0	10	ND	0	-	0	ND	0	-	0	ND
9/24/2013	0	0	100	ND	0	0	-	ND	0	0	100	ND	0	0	-	ND
9/25/2013	-	-	100	ND	-	-	-	ND	-	-	65	ND	-	-	100	ND
9/24/13-9/25/13[b]	-	-	100	ND	-	-	0	3.1	-	-	50	ND	-	-	80	7.1*

[a] = 24-hour composite sample
[b] = 24-hour composite sample, definitive tests
* = based on a 96-hour LC_{50} (50% chance of causing death to aquatic life)
C = laboratory control water
%M = percent mortality in 100% effluent
ND = not determined
TU_a = acute toxicity units
UP = percent mortality in upstream control water

Table 7. Use Attainment Table

Location	River Mile	Use	Status	Causes	Sources
Walnut Creek Downstream Ashville WWTP @ Cromley Road	4.14	WWH	FULL	None	None

WWH = warmwater habitat

Table 8. Water Quality Criteria in the Study Area

		Outside Mixing Zone Criteria				Inside Mixing Zone Maximum
		Average			Maximum	
Parameter	Units	Human Health	Agri-culture	Aquatic Life	Aquatic Life	
Aluminum	µg/L	--	--	--	--	--
Ammonia (summer)	mg/L	--	--	0.8	--	--
Ammonia (winter)	mg/L	--	--	2.3	--	--
Arsenic	µg/L	--	100	150	340	680
Barium	µg/L	--	--	220	2,000	4,000
Chromium, total	µg/L	--	100	230	4,900	9,800
Chromium, dissolved hexavalent	µg/L	--	--	11	16	31
Copper	µg/L	1,300	500	27	44	89
Cyanide, free	µg/L	220	--	0.012	0.046	0.092
Dissolved oxygen	mg/L	--	--	--	--	--
Filterable residue, total (dissolved solids)	mg/L	--	--	1,500	--	--
Iron	µg/L	--	5,000	--	--	--
Magnesium	mg/L	--	--	--	--	--
Manganese	µg/L	--	--	--	--	--
Nickel	µg/L	4,600	200	150	1,300	2,600
Nitrate + Nitrite	mg/L	--	100	--	--	--
Oil and Grease	mg/L	--	--	--	10	--
Phosphorus	mg/L	--	--	--	--	--
Selenium	µg/L	11,000	50	5	--	--
Strontium	µg/L	--	--	21,000	40,000	81,000
Total Kjeldahl Nitrogen	mg/L	--	--	--	--	--
Zinc	µg/L	69,000	25,000	340	340	680

Table 9. Instream Conditions and Discharger Flow

Parameter	Units	Season	Value	Basis
Stream Flows				
1Q10	cfs	annual	13	USGS Gage #03229800
7Q10	cfs	annual	14	USGS Gage #03229800
30Q10	cfs	summer	17	USGS Gage #03229800
		winter	43	USGS Gage #03229800
Harmonic Mean	cfs	annual	57.55	USGS Gage #03229800
Mixing Assumption	%	average	25	
	%	maximum	25	
Hardness	mg/l	annual	340	eDMR 901 (Ashville WWTP Jan 2010 - Jan 2015)
pH	S.U.	summer	8.175	eDMR 901 (Ashville WWTP Jan 2010 - Jan 2015)
		winter	8.2	eDMR 901 (Ashville WWTP Jan 2010 - Jan 2015)
Temperature	°C	summer	22	eDMR 901 (Ashville WWTP Jan 2010 - Jan 2015)
		winter	6.075	eDMR 901 (Ashville WWTP Jan 2010 - Jan 2015)
Aleris Rolled Products, Inc. flow	cfs	annual	0.0550732	eDMR 002 (Aleris Average Daily Design Flow)
	MGD	annual	0.356	eDMR 002 (Aleris Average Daily Design Flow)
Background Water Quality				
Aluminum	ug/l		1387.92	V08W41; 5/05-8/06; n=24; 9<MDL; Mean; 050600011805
Ammonia (summer)	mg/l		0.0816	V08W41; 5/05-8/06; n=19; 5<MDL; Mean; 050600011805
Ammonia (winter)	mg/l		0.0425	V08W41; 5/05-8/06; n=4; 2<MDL; Mean; 050600011805

Table 9. Instream Conditions and Discharger Flow (continued)

Parameter	Units	Season	Value	Basis
Background Water Quality (continued)				
Arsenic	ug/l		3.83	V08W41; 5/05-8/06; n=24; 0<MDL; Mean; 050600011805
Barium	ug/l		107.67	V08W41; 5/05-8/06; n=24; 0<MDL; Mean; 050600011805
Chromium	ug/l		15	V08W41; 5/05-8/06; n=24; 24<MDL; 1/2 MDL; 050600011805
Chromium, dissolved hexavalent	ug/l		0	No representative data available.
Copper	ug/l		10	V08W41; 5/05-8/06; n=24; 24<MDL; 1/2 MDL; 050600011805
Cyanide, free	mg/l		0	No representative data available.
Dissolved oxygen	mg/l		0	No representative data available.
Filterable residue, total	mg/l		439.75	V08W41; 5/05-8/06; n=24; 0<MDL; Mean; 050600011805
Iron - TR	ug/l		2735.2	V08W41; 5/05-8/06; n=24; 0<MDL; Mean; 050600011805
Magnesium	mg/l		26.167	V08W41; 5/05-8/06; n=24; 0<MDL; Mean; 050600011805
Manganese	ug/l		111.17	V08W41; 5/05-8/06; n=24; 0<MDL; Mean; 050600011805
Nickel	ug/l		20	V08W41; 5/05-8/06; n=24; 24<MDL; 1/2 MDL; 050600011805
Nitrate-N + Nitrite-N	mg/l		1.428	V08W41; 5/05-8/06; n=24; 24<MDL; Mean; 050600011805
Oil & grease	mg/l		0	No representative data available.
Phosphorus	mg/l		0	No representative data available.
Selenium	ug/l		1	V08W41; 5/05-8/06; n=24; 24<MDL; 1/2 MDL; 050600011805
Strontium	ug/l		908.46	V08W41; 5/05-8/06; n=24; 0<MDL; Mean; 050600011805
Total Kheldahl Nitrogen	mg/l		0.482	V08W41; 5/05-8/06; n=24; 24<MDL; Mean; 050600011805
Zinc	ug/l		15.5	V08W41; 5/05-8/06; n=24; 18<MDL; Mean; 050600011805

eDMR 002 = electronic discharge monitoring report, effluent
eDMR 901 = electronic discharge monitoring report, downstream
MDL = analytical method detection limit
Ohio EPA = Ohio Environmental Protection Agency
USGS = United States Geological Survey
V08W41 = Upstream monitoring station located at Walnut Creek at St. Paul Road, River Mile 8.8

Table 10. Summary of Effluent Limits to Maintain Applicable Water Quality Criteria

Parameter	Units	Outside Mixing Zone Criteria				Inside Mixing Zone Maximum
		Average			Maximum	
		Human Health	Agri-culture	Aquatic Life	Aquatic Life	
Aluminum	µg/L	--	--	--	--	--
Ammonia (summer)	mg/L	--	--	--	--	--
Ammonia (winter)	mg/L	--	--	--	--	--
Arsenic	µg/L	--	25,224	9,439	20,178	680
Barium	µg/L	--	--	7,359	113,671	4,000
Chromium, total	µg/L	--	3,874	2,552	53,888	9,800
Chromium, dissolved hexavalent	µg/L	--	--	130	176	31
Copper	µg/L	58,569	22,253	211	385	89
Cyanide, free	µg/L	9,987	--	0.14	0.51	0.092
Dissolved oxygen	mg/L	--	--	--	--	--
Filterable residue, total (dissolved solids)	mg/L	--	--	68,881	--	--
Iron	µg/L	--	596,664	--	--	--
Magnesium	mg/L	--	--	--	--	--
Manganese	µg/L	--	--	--	--	--
Nickel	µg/L	207,928	8,191	1,554	14,136	2,600
Nitrate + Nitrite	mg/L	--	25,851	--	--	--
Oil and Grease	mg/L	--	--	--	600	--
Phosphorus	mg/L	--	--	--	--	--
Selenium	µg/L	2,884,414	12,851	259	--	--
Strontium	µg/L	--	--	1,297,853	2,346,884	81,000
Total Kjeldahl Nitrogen	mg/L	--	--	--	--	--
Zinc	µg/L	3,131,547	1,134,180	3,845	3,594	680

Table 11. Parameter Assessment

Group 1: Due to a lack of criteria, the following parameters could not be evaluated at this time.

Aluminum	Dissolved oxygen	Magnesium
Manganese	Total Kjeldahl Nitrogen	

Group 2: PEQ < 25 percent of WQS or all data below minimum detection limit.
WLA not required. No limit recommended; monitoring optional.

Chromium	Iron	Zinc - TR
Chromium, Dissolved Hexavalent	Arsenic	Nickel - TR
Nitrate-N + Nitrite-N		

Group 3: PEQ_{max} < 50 percent of maximum PEL and PEQ_{avg} < 50 percent of average PEL.
No limit recommended; monitoring is optional.

Barium	Cyanide, free	Total Filterable Residue
Oil & grease	Selenium	Strontium

Group 4: PEQ_{max} >= 50 percent, but < 100 percent of the maximum PEL or
PEQ_{avg} >= 50 percent, but < 100 percent of the average PEL. Monitoring is appropriate.

No parameter applies to this group.

Group 5: Maximum PEQ >= 100 percent of the maximum PEL or average PEQ >= 100 percent of the average PEL, or either the average or maximum PEQ is between 75 and 100 percent of the PEL and certain conditions that increase the risk to the environment are present. Limit recommended.

Limits to Protect Numeric Water Quality Criteria

			Recommended Effluent Limits	
Parameter	Units	Period	Average	Maximum
Copper - TR	ug/l		--	89

PEL = preliminary effluent limit
PEQ = projected effluent quality
WLA = wasteload allocation
WQS = water quality standard

Table 12. Final Effluent Limits for Outfall 002

Parameter	Units	Concentration		Loading (kg/day)[a]		Basis[b]
		30 Day Average	Daily Maximum	30 Day Average	Daily Maximum	
Flow Rate	MGD	- - - - - - - - - - - Monitor - - - - - - - - - - - -				M[c]
pH	SU	6.5 - 9.0		--	--	WQS
Dissolved Oxygen	mg/L	5.0 (minimum)				PD/EP
Total Suspended Solids	mg/L	30	45	4.04	6.06	PD/EP
Oil & Grease	mg/L	--	10	--	1.35	WQS
Ammonia	mg/L	- - - - - - - - - - - Monitor - - - - - - - - - - - -				EP/BTJ
Phosphorus	mg/L	- - - - - - - - - - - Monitor - - - - - - - - - - - -				EP/BTJ
Total Filterable Residue (Dissolved Solids)	mg/L	- - - - - - - - - - - Monitor - - - - - - - - - - - -				RP/BTJ
Aluminum	µg/L	2,365	5,799	0.319	0.781	FEG - BAT/NSPS
Chromium	µg/L	255	631	0.034	0.085	FEG – BAT/NSPS
Hexavalent Chromium (Dissolved)	µg/L	- - - - - - - - - - - Monitor - - - - - - - - - - - -				BTJ
Copper	µg/L	- - - - - - - - - - - Monitor - - - - - - - - - - - -				RP
Cyanide, free	µg/L	--	92	--	0.0124	EP/BTJ
Zinc	µg/L	--	680	--	0.0916	BTJ
E. coli	#/100 mL	161	362	--	--	WQS
$CBOD_5$	mg/L	15	22.5	2.02	3.04	PD/EP
Acute Toxicity						
Ceriodaphnia dubia	TU_a	- - - - - - - - - - - Monitor - - - - - - - - - - - -				WET
Pimephales promelas	TU_a	- - - - - - - - - - - Monitor - - - - - - - - - - - -				WET

$CBOD_5$ = 5-day carbonaceous biochemical oxygen demand

[a] Effluent loadings based on average design discharge flow of 0.0356 MGD.

[b] Definitions:

BAT = Best Available Technology economically achievable, 40 CFR 465.32
BTJ = Best Technical Judgment
EP = Existing Permit
FEG = Federal Effluent Guidelines 40 CFR 465.30
M = Division of Surface Water NPDES Permit Guidance 1: Monitoring frequency requirements for Sanitary Discharges
NSPS = New Source Performance Standards, 40 CFR 465.33
PD = Plant Design
RP = Reasonable Potential for requiring water quality-based effluent limits and monitoring requirements in permits (3745-33-07(A))
WET = Whole Effluent Toxicity (OAC 3745-33-07(B))
WLA = Wasteload Allocation procedures (OAC 3745-2)
WQS = Ohio Water Quality Standards (OAC 3745-1)

[c] Monitoring of flow and other indicator parameters is specified to assist in the evaluation of effluent quality and treatment plant performance.

[d] 7 day average limit.

Attachment A. Calculation of Loading Limits for Outfall 002 Using Federal Effluent Guidelines

Aleris Rolled Products, Inc. is subject to the Federal Effluent Guidelines (FEG) found in 40 CFR Parts 465.31, 465.32, and 465.33, Coil Coating Point Source Category, Subpart C – Aluminum Basis Metal Subcategory.

These guidelines have been used to determine appropriate permit limits for outfall 002. A plant upgrade in 2011 included the installation of another aluminum coil coating line separate from the existing line. The FEG for 40 CFR 465.33 (New Source Performance Standards) applies to the recently installed production line while the FEG for 40 CFR Parts 465.31 and 465.32 (Best Practicable Control Technology Available and Best Available Technology Economically Achievable, respectively) apply to the thin production line.

The new production line is a 60-inch coil coating line (wide line) and the other line is a 24-inch aluminum coating line (narrow line). The production rate of each line are listed in the table below.

Average Production Rates (million ft^2)	
Wide Line	Narrow Line
3.06	0.875

The calculation of allowable loadings for aluminum, chromium, cyanide, oil & grease, total suspended solids (TSS), and zinc is explained on the following pages in detail.

Attachment A. Calculation of Loading Limits for Outfall 002 Using Federal Effluent Guidelines (continued)

New Source Performance Standards (NSPS)

The NSPS standards only apply to the wide coating line.

$$Loading\ \left(\frac{kg}{day}\right) = FEG\ \left(\frac{lbs}{million\ ft^2}\right) * Production\ \left(\frac{million\ ft^2}{day}\right) * \frac{1\ kg}{2.2\ lbs}$$

As an example of the calculation of the daily maximum allowable loadings from these operations using aluminum is as follows:

$$Aluminum\ Loading = 0.30\ \frac{lbs}{million\ ft^2} * 3.06 \frac{million\ ft^2}{day} * \frac{1\ kg}{2.205\ lbs} = 0.416\ \frac{kg}{day}$$

* For purposes of these calculations, the 'million square feet of area processed' is equivalent to production. Available loadings for aluminum, chromium, cyanide, oil & grease, TSS, and zinc are shown in the table below.

Parameter	Daily Maximum		30 Day Average	
	FEG Effluent Limitation (lbs/million ft^2)	Allowable Loading (kg/day)	FEG Effluent Limitation (lbs/million ft^2)	Allowable Loading (kg/day)
Chromium	0.037	0.051	0.015	0.021
Cyanide	0.020	0.028	0.008	0.011
Zinc	0.10	0.139	0.041	0.057
Aluminum	0.30	0.416	0.121	0.168
Oil & Grease	0.98	1.360	0.98	1.360
TSS	1.46	2.026	1.17	1.624
pH	Within the range of 7.5 S.U. to 10.0 S.U. at all times			

FEG = Federal Effluent Guidelines
S.U. = Standard Units
TSS = Total Suspended Solids

Attachment A. Calculation of Loading Limits for Outfall 002 Using Federal Effluent Guidelines (continued)

Best Available Technology Economically Achievable (BAT) and Best Practicable Control Technology Available (BPT)

The FEGs outlined by BAT and BPT both apply to the thin production line. For each parameter, the lowest limit between the two categories is selected as standard for the thin production line.

An example of the calculation of the daily maximum allowable loadings from these operations using aluminum is as follows:

$$Aluminum\ Loading = 0.92\ \frac{lbs}{million\ ft^2} * 0.875\ \frac{million\ ft^2}{day} * \frac{1\ kg}{2.205\ lbs} = 0.365\ \frac{kg}{day}$$

Parameter	Daily Maximum		30 Day Average	
	FEG Effluent Limitation* (lbs/million ft^2)	Allowable Loading (kg/day)	FEG Effluent Limitation* (lbs/million ft^2)	Allowable Loading (kg/day)
Chromium	0.085	0.034	0.034	0.013
Cyanide	0.059	0.023	0.024	0.010
Zinc	0.27	0.107	0.12	0.048
Aluminum	0.92	0.365	0.38	0.151
Oil & Grease	13.8	5.476	8.27	3.282
TSS	28.3	11.230	13.8	5.476
pH	Within the range of 7.5 S.U. to 10.0 S.U. at all times			

FEG = Federal Effluent Guidelines
S.U. = Standard Units
TSS = Total Suspended Solids
* Best Available Technology economically achievable (BAT) applies to chromium, cyanide, zinc, and aluminum
Best Practicable control Technology currently available (BPT) applies to oil & grease, TSS, and pH

Attachment A. Calculation of Loading Limits for Outfall 002 Using Federal Effluent Guidelines (continued)

Total Allowable Loadings

Allowable Loadings Based on Federal Effluent Guidelines (kg/day) (40 CFR Parts 465.31, 465.32, and 465.33)			
Parameter	NSPS	BAT/BPT	Totals
Chromium			
Daily Maximum	0.051	0.034	**0.085**
30-day Average	0.021	0.013	**0.034**
Cyanide*			
Daily Maximum	0.028	0.023	**0.051**
30-day Average	0.011	0.010	**0.021**
Zinc*			
Daily Maximum	0.139	0.107	**0.246**
30-day Average	0.057	0.048	**0.105**
Aluminum			
Daily Maximum	0.416	0.365	**0.781**
30-day Average	0.168	0.151	**0.319**
Oil & Grease*			
Daily Maximum	1.360	5.476	**6.836**
30-day Average	1.360	3.282	**4.642**
Total Suspended Solids*			
Daily Maximum	2.026	11.230	**13.256**
30-day Average	1.624	5.476	**7.100**

*The limits for these parameters are not as protective as those required by water quality standards or plant design standards; FEG standards do not apply to these parameters in the final effluent table for outfall 002
BAT = Best Available Technology economically achievable
BPT = Best Practicable control Technology currently available
CFR = Code of Federal Regulations
NSPS = New Source Performance Standards